World Academy of Science, Engineering and Technology
International Journal of Chemical and Molecular Engineering
Vol:1, No:9, 2007

Phase Behavior of CO_2 and CH_4 Hydrate in Porous Media

Seong-Pil Kang, Ho-Jung Ryu, and Yongwon Seo

Open Science Index, Chemical and Molecular Engineering Vol:1, No:9, 2007 publications.waset.org/9254.pdf

***Abstract*—**Hydrate phase equilibria for the binary CO_2+water and CH_4+water mixtures in silica gel pore of nominal diameters 6, 30, and 100 nm were measured and compared with the calculated results based on van der Waals and Platteeuw model. At a specific temperature, three-phase hydrate-water-vapor (HLV) equilibrium curves for pore hydrates were shifted to the higher-pressure condition depending on pore sizes when compared with those of bulk hydrates. Notably, hydrate phase equilibria for the case of 100 nominal nm pore size were nearly identical with those of bulk hydrates. The activities of water in porous silica gels were modified to account for capillary effect, and the calculation results were generally in good agreement with the experimental data. The structural characteristics of gas hydrates in silica gel pores were investigated through NMR spectroscopy.

***Keywords*—**CO_2, CH_4, gas hydrate, equilibria.

I. Introduction

CLATHRATE hydrates (or gas hydrates) are a kind of inclusion compounds which are formed by physically stable interactions between water and relatively small guest molecules entrapped in the cavities of a three dimensional lattice-like structure built by water molecules under low temperature and high pressure conditions. Those nonstoichiometric crystalline compounds are divided into three distinct structures, I, II and H, which differ in cavity size and shape. Structure I and II hydrates consist of two types of cavities, while structure H hydrate consists of three types of cavities. The structure H hydrate especially needs both large and small guest molecules to stabilize the structure. CO_2 and CH_4 are known to form the structure I hydrate.

Gas hydrates are particularly interest in the petroleum industry as well as in energy and environmental fields. A large amount of natural gas exist both onshore buried under the permafrost and offshore under the oceanic or deep lake sediments as natural gas hydrates. Because of high volume compressibility of gas hydrates as much as 170 times of gas at standard temperature and pressure conditions, naturally occurring gas hydrates, mostly containing CH_4, are regarded as future energy resources [1]. Recent investigations consider gas hydrates as a new option for sequestering CO_2, the representative global warming gas, into deep ocean to prevent further release into atmosphere [2].

In spite of the importance for understanding the phase behavior of gas hydrates in porous media of sediments in deep ocean, only a few works have been reported in the literature. Handa and Stupin [3] investigated the first work of the effect of porous media on equilibrium pressures of CH_4 and C_3H_8 hydrates. They showed that the equilibrium pressures of the corresponding gas hydrates in silica gel pores were higher than those of the bulk hydrates. Uchida *et al.* [4], [5] determined the equilibrium pressures of CH_4, C_3H_8, and CO_2 hydrates in porous glasses. In a series of publications, Wilder *et al.* [6], [7], Seshadri *et al.* [8], Smith *et al.* [9], and Zhang *et al.* [10] used a conceptual model to explain the hydrate equilibria in porous media, adopting a pore size distribution. Some workers [11], [12] have modified the thermodynamic model for bulk hydrate originally developed by van der Waals and Platteeuw (vdWP) to elucidate the effect of pore size on hydrate equilibrium conditions.

Whereas most of works on hydrate equilibrium conditions in porous media have been concentrated on simulating the circumstances of simplified sediments, the authors have an interest in employing gas hydrate in porous media as a gas storage method. Porous materials such as silica gels have a great amount of internal volumes to enable to bear waters molecules inside, which can be used for hydrate formation. Seo *et al.* [13] showed a remarkable result on rapid CO_2 hydrate formation in porous silica gels. Their result showed that the confined water does not hinder gas transport into silica pores, which is the typical phenomenon in bulk hydrates thus gas molecules can easily contact and diffuse into pores through the layer of bound water to participate in the formation of hydrate in pores.

The aim of the present work is to understand the fundamental phase behavior and structure details of pore hydrates for method to store gas molecules in porous media by using gas hydrate formation.

II. Experimental Procedures

A. Materials

CO_2 gas used for the present study was supplied by World

Manuscript received June 15, 2007. This work was supported by Ministry of Commerce, Industry and Energy (MOCIE) through Electric Power Industry Technology Evaluation & Planning Center (ETEP), Republic of Korea.

S.-P. Kang is with the Energy Policy Research Department, Korea Institute of Energy Research, Daejeon, 305-343 Korea (corresponding author to provide phone: +82-42-860-3475; fax: +82-42-860-3097; e-mail: spkang@kier.re.kr).

H.-J. Ryu is with the Energy Conversion Research Department, Korea Institute of Energy Research, Daejeon, 305-343 Korea (e-mail: hjryu@kier.re.kr).

Y. Seo is with the Department of Chemical Engineering, Changwon National University, Changwon, 641-773 Korea (e-mail: yseo@changwon.ac.kr).

Open Science Index, Chemical and Molecular Engineering Vol:1, No:9, 2007 publications.waset.org/9254.pdf

Gas (Korea) and had a stated purity of 99.9 mol%. CH_4 gas with a minimum purity of 99.995 mol% was supplied by Matheson Gas Products Co. and deionized water produced by a Millipore purifier was used. As a porous material, spherical silica gels of nominal pore diameter 6 nm, 30 nm, and 100 nm were selected and purchased from Aldrich (6 nm) and Silicycle (30 nm and 100 nm), respectively. All the materials were used without further treatment. The properties of silica gels having 6 and 30 nm pore diameters were measured by nitrogen adsorption/desorption experiments with ASAP 2400 (Micrometrics), and those of 100 nm pore diameter by mercury intrusion, listed in Table I.

TABLE I
PHYSICAL PROPERTIES OF SILICA GEL SAMPLES

Sample Name	6 nm SG	30 nm SG	100 nm SG
mean particle diameter (μm)	150 to 250	40 to 75	40 to 75
mean pore diameter (nm)	5.51	30.1	94.5
specific pore volume (m^3/kg)	8.4×10^{-4}	8.4×10^{-4}	8.3×10^{-4}
specific surface area (m^2/kg)	586×10^3	94.9×10^3	42.4×10^3

The sorption isotherms of nitrogen at 70 K exhibit a nearly ideal H1 type hysteresis loop, with almost vertical steps on the ascending and descending curve, which is typical characteristic of a mesoporous medium with a narrow pore size distribution. The pore size distribution was computed using the Barrett-Joyner-Halenda (BJH) method, applied to de desorption branch of the nitrogen isotherm. Their normalized pore size distributions were shown in Fig. 1. The used silica gels were first dried at 373 K for 24 h before water sorption. The, the pore saturated silica gels were prepared by placing these dried silica gels in a desiccator containing degassed water, evacuating the desiccator, and allowing more than 3 days in order to establish the solid-vapor equilibrium. The total amount of sorbed water in the silica gel pores was confirmed by measuring the mass of silica gels before and after saturation and was found to be almost identical with the pore volume of each silica gel.

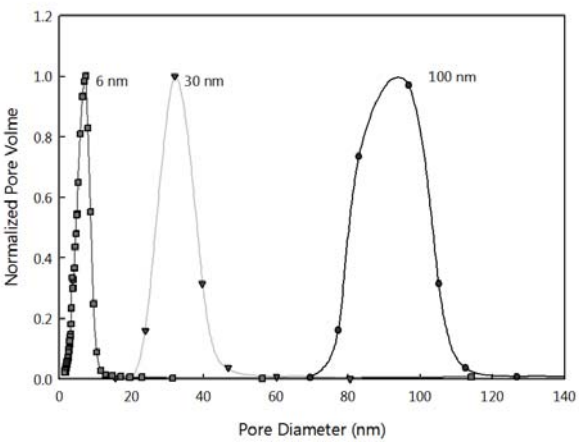

Fig. 1 Pore size distributions of silica gels used in this study

B. Apparatus and Procedure

The pressure-temperature dissociation equilibrium curves for CO_2 and CH_4 hydrates formed in silica gel pores were determined using a high-pressure cell with accompanying experimental setup (Fig. 2). The apparatus was specifically constructed to measure accurately the hydrate dissociation pressures and temperatures. The experimental setup consisted of an equilibrium reactor and a buffer cell, both made of 316 stainless steel (maximum working pressure of 15 MPa). The equilibrium reactor had an internal volume of about 350 cm^3. The experiment for hydrate phase equilibrium measurements starts with charging the equilibrium cell with about 250 cm^3 of silica gels containing pore water. After the cell was pressurized to a desired pressure with CO_2 or CH_4, the whole main system was slowly cooled to 263 K. When pressure depression owing to hydrate formation reached a steady-state condition, the cell temperature was increased at a rate of about 0.1 K/h. The nucleation and dissociation steps were repeated at least two times in order to reduce hysteresis phenomenon. While the experiment was performed, the temperature and pressure of the equilibrium cell was gathered by data acquisition system. The equilibrium pressure and temperature of three phases (HLV) were determined by tracing the $P-T$ profiles from hydrate formation to dissociation. As clearly demonstrated by Anderson *et al.* [14], a gradual change of slope around the heating curve was shown, due to the pore size distribution. Each measured experimental equilibrium dissociation point was chosen at the point of slope inflection at nominal mean pore diameter.

To identify crystalline structure of formed gas hydrates in silica gel pores and compare them with those of the bulk state hydrate, a Bruker 400 MHz solid-state NMR spectrometer was used in this study. The NMR spectra were recorded at 243 K by placing the hydrate samples within a 4 mm O.D. Zr rotor that was loaded into the variable temperature probe. All ^{13}C NMR spectra were recorded at a Larmor frequency of 100.6 MHz with magic angle spinning (MAS) at about 2–4 kHz. The pulse length of 2μs and pulse repetition delay of 20s under proton decoupling were employed when the radio frequency field strengths of 50 kHz corresponding to 5 μs 90° pulses were used. The down-field carbon resonance peak of adamantine, assigned a chemical shift of 38.3 ppm at 300 K, was used as an external chemical shift reference.

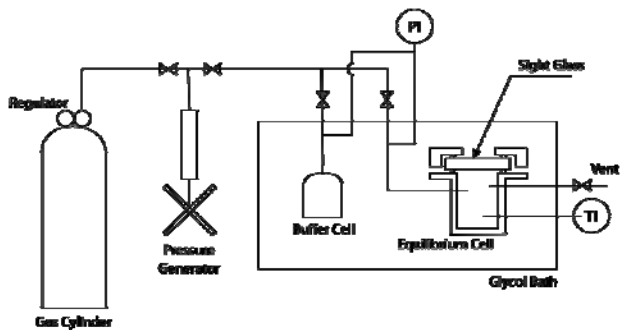

Fig. 2 Schematic illustration of the equilibrium experimental setup

Open Science Index, Chemical and Molecular Engineering Vol:1, No:9, 2007 publications.waset.org/9254.pdf

III. Thermodynamic Model

The equilibrium criteria of the hydrate-forming mixture (CO_2+water or CH_4+water) are based on the equality of fugacities of the specified component *i* in all phases which coexist simultaneously

$$\hat{f}_i^H = \hat{f}_i^L = \hat{f}_i^V \left(= \hat{f}_i^I \right) \tag{1}$$

where *H* stands for the hydrate phase, *L* for the water-rich liquid phase, *V* for the vapor phase, and *I* for the ice phase. The chemical potential difference between the empty hydrate and filled hydrate phases is generally derived from the statistical mechanics in vdWP model

$$\Delta\mu_w^{MT-H} = \mu_w^{MT} - \mu_w^H = -RT \sum_m v_m \ln\left(1 - \sum_j \theta_{mj}\right) \tag{2}$$

where *w* denotes water, v_m is the number of cavities of type m per water molecule in the hydrate phase and θ_{mj} is the fraction of cavities of type *m* occupied by the molecules of component *j*. This fraction occupancy is determined by a Langmuir-type expression

$$\theta_{mj} = \frac{C_{mj} \hat{f}_j^V}{1 + \sum_k C_{mk} \hat{f}_k^V} \tag{3}$$

where C_{mj} is the Langmuir constant of component *j* on the cavity of type *m* and $\hat{f}_j^V$ the fugacity of component *j* in the vapor phase with which the hydrate phase is in equilibrium. The fugacity was determined using the Soave-Redlich-Kwong (SRK) equation of state and the Langmuir constant, C_{mj}, was calculated using

$$C_{mj} = \frac{4\pi}{kT} \int_0^\infty \exp\left[\frac{-\varpi(r)}{kT}\right] r^2 dr \tag{4}$$

where *k* is the Bolzmann's constant, *r* is the radial distance from the cavity center, and *w(r)* is the spherical-core potential. The Kihara cell potential with a spherical-core was used for the cavity potential function because it has been reported to give better results than the Lennard-Jones potential for calculating the hydrate dissociation pressures [15].

On the basis of classical thermodynamics, Holder *et al.* [16] suggested the method to simplify the chemical potential difference of water between hypothetical empty hydrate and that of reference state in liquid state as follows

$$\frac{\Delta\mu_w^{MT-L}}{RT} = \frac{\Delta\mu_w^0}{RT_0} - \int_{T_0}^{T} \frac{\Delta h_w^{MT-I} + \Delta h_w^{fus}}{RT^2} dT + \int_0^P \frac{\Delta v_w^{MT-I} + \Delta v_w^{fus}}{RT} dP - \ln(\gamma_w x_w) \tag{5}$$

where $\Delta\mu^0_w$ is the difference in chemical potential between empty hydrate and water at T_0 (the normal melting point of water, 273.15 K) and zero absolute pressure, and Δh_w^{fus} and Δv_w^{fus} are respectively the molar difference in enthalpy and volume between ice and liquid water.

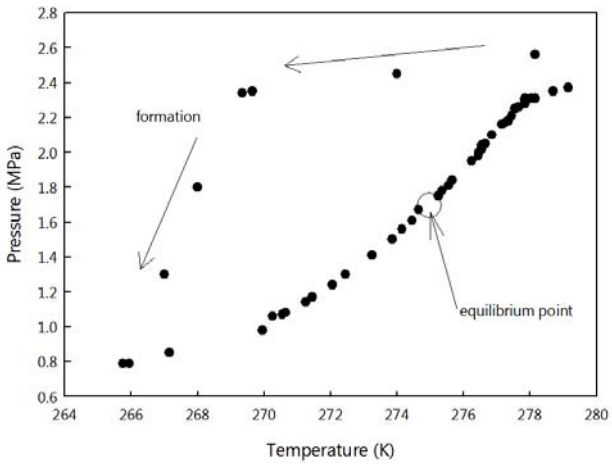

Fig. 3 *P–T* trace for determination of CO_2 hydrate equilibrium point (30 nm SG)

By combining (1), (2), and (5), the relation between the equilibrium pressure and temperature is written in the form as follows

$$\frac{\Delta\mu_w^0}{RT_0} - \int_{T_0}^{T} \frac{\Delta h_w^{MT-I} + \Delta h_w^{fus}}{RT^2} dT + \int_0^P \frac{\Delta v_w^{MT-I} + \Delta v_w^{fus}}{RT} dP + \sum_m v_m \ln\left(1 - \sum_j \theta_{mj}\right) - \ln(\gamma_w x_w) = 0 \tag{6}$$

In the present study, it is assumed that the pores of silica gels were completely saturated with water, and thus, in the HLV equilibrium, the pores are completely filled with liquid water and hydrate in equilibrium with bulk gas. The decrease of water activity in porous silica gels mainly due to capillary effect occurring by the presence of geometrical constraints, that a cylindrical pore and solid-phase dissociation (ice melting or hydrate dissociation) are assumed, can be modified, thus the last term of (6) is expressed as [11], [12]

$$\ln a^{pore}{}_w = \ln(\gamma_w x_w) - \frac{F v_L \sigma_{HW}}{rRT} \cos\theta \tag{7}$$

where v_L is the molar volume of pure water, θ is the wetting angle between water and hydrate phase, σ_{HW} is the interfacial tension between hydrate and water phase, *r* is the pore radius, and *F* is the shape factor of the hydrate-water interfacial curvature. Solving (6) and (7) will determine the three-phase HLV equilibrium conditions for pores of radius *r*. The right side of (7) moves the equilibrium conditions to higher pressures and lower temperatures when compared with those of bulk hydrates.

IV. Results And Discussion

Fig. 3 shows a typical *P–T* trace for determining the equilibrium point of gas hydrate formation in porous media. We used the step heating technique to obtain equilibrium data points which is significantly more reliable and repeatable than conventional continuous heating methods. Unlike the case of bulk state hydrates, the heating curve for hydrate dissociation

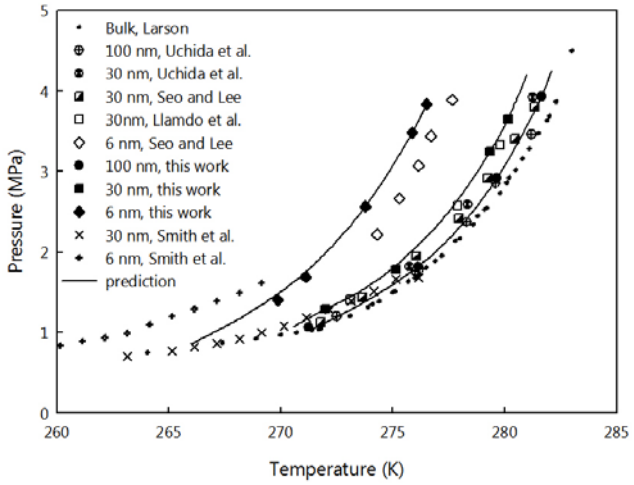

Fig. 4 Hydrate phase equilibria of the binary CO_2+water mixtures in silica gel pores

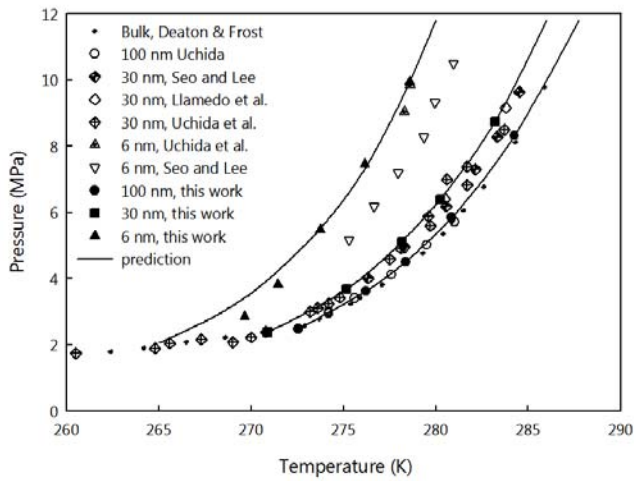

Fig. 5 Hydrate phase equilibria of the binary CH_4+water mixtures in silica gel pores

TABLE II
EQUILIBRIUM TEMPERATURE AND PRESSURE DATA FOR CO_2 HYDRATE IN SILICA GEL PORES

6 nm SG		30 nm SG		100 nm SG	
T(K)	*P*(MPa)	*T*(K)	*P*(MPa)	*T*(K)	*P*(MPa)
269.88	1.40	272.00	1.29	271.25	1.06
271.12	1.69	275.15	1.78	276.15	1.82
273.78	2.56	279.35	3.25	279.65	2.92
275.87	3.48	280.15	3.65	281.65	3.93
276.52	3.83				

TABLE III
EQUILIBRIUM TEMPERATURE AND PRESSURE DATA FOR CH_4 HYDRATE IN SILICA GEL PORES

6 nm SG		30 nm SG		100 nm SG	
T(K)	*P*(MPa)	*T*(K)	*P*(MPa)	*T*(K)	*P*(MPa)
269.65	2.84	270.90	2.38	272.55	2.47
271.45	3.82	275.15	3.67	276.20	3.62
273.75	5.46	278.15	5.11	278.35	4.50
276.15	7.45	280.25	6.40	280.85	5.84
278.58	9.94	283.20	8.73	284.25	8.32

in a porous medium with pores varying sizes often has a specific *S* shape. This reflects the pore size/volume distribution of the porous medium. Several workers [4], [5] used non-equilibrium continuous heating technique to generate data, and did not properly take into account pore size distribution effects. Furthermore, some authors [6]–[10] misunderstood what the dissociation conditions for specific pore diameters. They presented a heating curve what we have called as *hydrate equilibrium data*. While obtaining this heating curve, an equilibrium data point should be chosen at a specific pore size diameter.

Three-phase HLV equilibria of CO_2 and CH_4 hydrates in silica gel pores with nominal pore diameters of 6, 30, and 100 nm were measured. Model prediction results were also presented along with the experimental data in Fig. 4 and 5 for CO_2+water and CH_4+water mixture, respectively, and listed in Table II and III. All HLV equilibrium lines of each hydrate in silica gel pores were shifted to the lower temperature and higher pressure region when compared with those of bulk hydrates. This inhibition behavior can appear similarly for melting point depression of ice in small pores. As clearly seen in figures, the measured data showed in a good agreement with those of Anderson *et al.* [17] previously reported data but largely deviated from those of Smith *et al.* In case of 30 and 100 nm silica gel pores, the measured equilibrium pressures in this study was generally in agreement with those of Seo *et al.* [18], and Uchida *et al.* [5] even though their experimental method is controversial. On the other hand, the difference of the equilibrium dissociation pressures between this study and Seo *et al.* [18] was significant at smaller silica gel pore of 6 nm nominal pore diameter. It was also shown that the equilibrium pressure shifts were found to be larger as the pore size decreases at constant temperature, and the equilibrium pressure shifts become larger as temperature increases at constant pore size. Although the experimental determinations of the binary CO_2+water mixtures in porous silica gels were restricted to the HLV phase boundary in this study, the adjacent other phase boundaries such as hydrate-ice-vapor (HIV) and hydrate-water-liquid CO_2 (HLL) could be measured and calculated based on our previous works [19], [20].

In silica gel pores, the chemical potential of components had been affected by a consequence of molecular interactions at the hydrophilic pore wall surfaces, and the energy required maintaining capillary equilibrium. Partial ordering and bonding of water molecules with pore surfaces let down water activity, therefore decrease of water activity needs higher pressure at a specific temperature and lower temperature. This phenomenon is also observed in the mixtures containing inhibitors such as salts and alcohols which cause a depression in the freezing point of water thereby reducing its activity.

Even we carefully introduced water to silica gel pores, a significant part of water in the wall of confined spaces would be existed as bound water, which will not participate in gas

Open Science Index, Chemical and Molecular Engineering Vol:1, No:9, 2007 publications.waset.org/9254.pdf

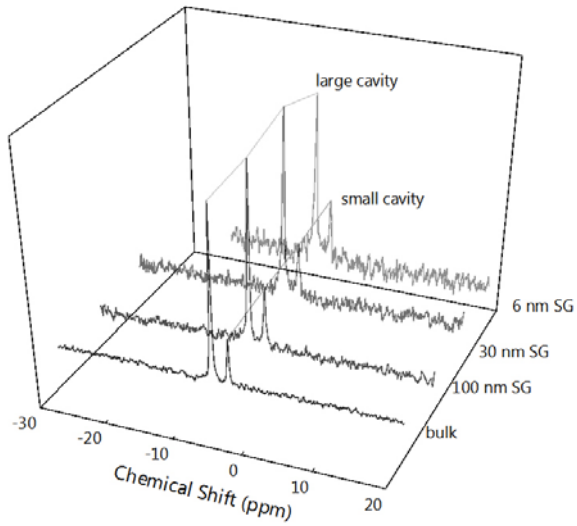

Fig. 6 ^{13}C NMR spectra of CH_4 hydrates in silica gel pores and bulk state hydrates at 200 K

hydrates formation under same temperature and pressure conditions. In this thermodynamic modeling study, we assumed that the pores of silica gels were completely saturated with water, and then reached the HLV equilibrium where the pores were filled with only water and liquid water. For cylindrical pores (assumption in this study) in hydrate dissociation, the shape factor (F) and the contact angle (θ) in (7) is designated as 1 and 0°, respectively. All of the T_o get a solution of predicted equilibrium pressure to (6) at a proposed initial guessed temperature, the only remaining property is now the interfacial tension between hydrate and liquid water, σ_{HW}. Uchida *et al.* [5] presented the values of σ_{HW} from fitting their experimental data by the Gibbs-Thompson equation for CO_2 and CH_4 hydrates, but the estimated values (0.017 J/m^2 for CH_4 and 0.014 J/m^2 for CO_2 hydrate) did not produce good agreement to experimental data. Recently, Anderson *et al.* [17] presented more sophisticatedly estimated values from experimental data for hydrate dissociation condition (0.032 J/m^2 for CH_4 and 0.030 J/m^2 for CO_2 hydrate). We employed our previously used ones including the latter two interfacial tension values. All of the parameter values in this model were given in the previous papers [19], [20].

For the confirmation of hydrate structure, the NMR spectroscopy was adopted to CH_4 hydrates confined in silica gel pores. Fig. 6 shows the ^{13}C MAS NMR spectra of CH_4 hydrates in porous silica gels and bulk hydrates. All the spectra show two peaks at the nearly same chemical shifts of -6.9 and -4.6 ppm, and the shifts denote the small and large cages in the unit cell of structure I for methane hydrates, respectively. From this result, it is possible to conclude that the structure of CH_4 hydrates formed in porous silica gels was the same as that of the bulk CH_4 hydrate without structure transition.

In this study we carefully measured the equilibrium hydrate dissociation pressures from mesoporous (6 and 30 nm SG) to macroporous (100 nm SG) media, and calculated the prediction results with thermodynamic model taking the porous medium into account. According to the equilibrium measurement results, the equilibrium dissociation pressures are inhibited along to the pore diameters of silica gels, and the degree of shifts increases as the pore size of silica gels decreases. Equilibrium results for 100 nm silica gel pores are nearly close to those for bulk hydrates. We intend to use the porous material such as silica gel as the gas storage medium. Silica gel pores containing water inside can be used as hydrate forming mass. The HLV equilibrium pressures demonstrate that the porous material having larger than 100 nm of pore diameter has no inhibition effect on hydrate formation. When producing gas hydrates, the stirred tank, water spraying, or fluid flow-type reactor is generally used. But the product is obtained as the slurry containing formed hydrate and unconverted remaining water. Thus, the additional step is need to separate formed gas hydrate from the slurry that is relatively difficult and requires energy. To solve this problem we are intending to use porous material containing water in the pores that is unnecessary for separating from slurry. Further experimental efforts should be made to estimate the pore effects on the formation rate of gas hydrate and find the enhancing speed of the rate. In addition, adequate hydrate formation reactor that is suitable for the pore system should be also devised.

The present study can be applied as valuable key information to develop the method of gas storage.

References

[1] E. D. Sloan, *Clathrate Hydrates of Natural Gas*, 2nd ed., New York: Dekker, 1998.
[2] H. Teng, A. Yamasaki, M.-K. Chun, and H. Lee, "Why does CO2 hydrate disposed of in the ocean in the hydrate-formation region dissolve in seawater?," *Energy*, vol. 22, no. 12, pp1111–1117, 1997.
[3] Y. P. Handa, and D. Stupin, "Thermodynamic properties and dissociation characteristics of methane and propane hydrates in 70-Å-radius silica gel pores," *J. Phys. Chem.*, vol. 96, no. 21, pp8599–8603, 1992.
[4] T. Uchida, T. Ebinuma, and T. Ishizaki, "Dissociation condition measurements of methane hydrate in confined small pores of porous glass," *J. Phys. Chem. B*, vol. 103, no. 18, pp3659–3662, 1999.
[5] T. Uchida, T. Ebinuma, S. Takeya, J. Nagao, and H. Narita, "Effects of pore sizes on dissociation temperatures and pressures of methane, carbon dioxide, and propane hydrates in porous media," *J. Phys. Chem. B*, vol. 106, no. 4, pp820–826, 2002.
[6] J. W. Wilder, K. Seshadri, and D. H. Smith, "Modeling hydrate formation in media with broad pore size distribution," *Langmuir*, vol. 17, no. 21, pp6729–6735, 2001.
[7] J. W. Wilder, K. Seshadri, and D. H. Smith, "Resolving apparent contradictions in equilibrium measurements for clathrate hydrates in porous media," *J. Phys. Chem. B*, vol. 105, no. 41, pp9970–9972, 2001.
[8] K. Seshadri, J. W. Wilder, and D. H. Smith, "Measurements of equilibrium pressures and temperatures for propane hydrate in silica gels with different pore-size distributions," *J. Phys. Chem. B*, vol. 105, no. 13, pp2627–2631, 2001.
[9] D. H. Smith, J. W. Wilder, and K. Seshadri, "Methane hydrate equilibria in silica gels with broad pore-size distributions," *AIChE J.*, vol. 48, no. 2, pp393–400, 2002.
[10] W. Zhang, J. W. Wilder, and D. H. Smith, "Interpretation of ethane hydrate equilibrium data for porous media involving hydrate-ice equilibria," *AIChE J.*, vol. 48, no. 10, pp2324–2331, 2002.
[11] P. Henry, M. Thomas, and M. B. Clennell, "Formation of natural gas hydrates in marine sediments 2. Thermodynamic calculations of stability conditions in porous sediments," *J. Geophys. Res. B*, vol. 104, no. B10, pp23005–23022, 1999.

Open Science Index, Chemical and Molecular Engineering Vol:1, No:9, 2007 publications.waset.org/9254.pdf

[12] M. A. Clarke, M. Pooladi-Darvish, and P. R. Bishnoi, "A method to predict equilibrium conditions of gas hydrate formation in porous media," *Ind. Eng. Chem. Res*., vol. 38, no. 6, pp2485–2490, 1999.
[13] Y.-T. Seo, I. L. Moudrakovski, J. A. Ripmeester, J.-W. Lee, and H. Lee, "Efficient recovery of CO_2 from flue gas by clathrate hydrate formation in porous silica gels," *Environ. Sci. Technol*., vol. 39, no. 7, pp2315–2319, 2005.
[14] R. Anderson, M. Llamedo, B. Tohidi, and R. W. Burgass, "Characteristics of clathrate hydrate equilibria in mesopores and interpretation of experimental data," *J. Phys. Chem. B*, vol. 107, no. 15, pp3500–3506, 2003.
[15] V. McKoy and O. Sinanoglu, "Theory of dissociation pressures of some gas hydrates," *J. Chem. Phys*., vol. 38, no. 12, pp2946–2956, 1963.
[16] G. D. Holder, G. Corbin, and K. D. Papadopoulos, "Thermodynamic and molecular properties of gas hydrates from mixtures containing methane, argon, and krypton," *Ind. Eng. Chem. Fund*., vol. 19, no. 3, pp282–286, 1980.
[17] R. Anderson, M. Llamedo, B. Tohidi, and R. W. Burgass, "Experimental measurement of methane and carbon dioxide clathrate hydrate equilibria in mesoporous silica," *J. Phys. Chem. B*, vol. 107, no. 15, pp3507–3514, 2003.
[18] Y. Seo, H. Lee, and T. Uchida, "Methane and carbon dioxide hydrate phase behavior in small porous silica gels: three-phase equilibrium determination and thermodynamic modeling," *Langmuir*, vol. 18, no. 24, pp9164–9170, 2002.
[19] Y. Seo and H. Lee, "A new hydrate-based recovery process for removing chlorinated hydrocarbons from aqueous solutions," *Environ. Sci. Technol*., vol. 35, no. 16, pp3386–3390, 2001.
[20] S.-P. Kang and H. Lee, "Recovery of CO_2 from flue gas using gas hydrate: thermodynamic verification through phase equilibrium measurements," *Environ. Sci. Technol*., vol. 34, no. 20, pp4397–4400, 2000.

Seong-Pil Kang received the B.S. degree in Chemical Engineering from Korea University, Seoul, Korea in 1994, the M.S. and the Ph.D. degrees in Chemical Engineering from Korea Advanced Institute of Science and Technology (KAIST), Daejeon in 1996 and 2000, respectively.
He had worked in the National Institute for Resources and Environment (NIRE), Japan as a research fellow and KAIST, and in the Petrochemical Research Institute, LG Chem Ltd as a Project Leader. Since 2005, he has been working in Korea Institute of Energy Research (KIER), Daejeon, Korea. His major research areas are the fluid phase equilibrium, kinetics, separation science (distillation, crystallization, absorption), gas hydrate technologies.

Ho-Jung Ryu received the B.S., M.S., and Ph.D. degrees in the Department of Chemical Engineering, from Konkuk Uiversity, Seoul, Korea in 1994, 1996, and 2000, respectively. Since 2000, he has been working in the Energy Conversion Research Department, KIER. His areas of research include the fluidized bed reactors and chemical-looping combustors.

Yongwon Seo is an Assistant Professor of Chemical Engineering at Changwon National University, Changwon, Korea. He received the B.S., M.S., and Ph.D. degrees in the Department of Chemical Engineering, from KAIST in 1997, 1999, and 2003, respectively. He worked in the Energy Conversion Research Department, KIER. His research areas are the gas hydrate technologies.

Open Science Index, Chemical and Molecular Engineering Vol:1, No:9, 2007 publications.waset.org/9254.pdf