World Academy of Science, Engineering and Technology
International Journal of Mechanical and Mechatronics Engineering
Vol:3, No:12, 2009

# Robust Control Synthesis for an Unmanned Underwater Vehicle

A. Budiyono

Open Science Index, Mechanical and Mechatronics Engineering Vol:3, No:12, 2009 publications.waset.org/8646.pdf

***Abstract*—**The control design for unmanned underwater vehicles (UUVs) is challenging due to the uncertainties in the complex dynamic modeling of the vehicle as well as its unstructured operational environment. To cope with these difficulties, a practical robust control is therefore desirable. The paper deals with the application of coefficient diagram method (CDM) for a robust control design of an autonomous underwater vehicle. The CDM is an algebraic approach in which the characteristic polynomial and the controller are synthesized simultaneously. Particularly, a coefficient diagram (comparable to Bode diagram) is used effectively to convey pertinent design information and as a measure of trade-off between stability, response speed and robustness. In the polynomial ring, Kharitonov polynomials are employed to analyze the robustness of the controller due to parametric uncertainties.

***Keywords*—**coefficient diagram method, robust control, Kharitonov polynomials, unmanned underwater vehicles.

## I. Introduction

VARIOUS control techniques have been proposed for UUVs both in simulation environment and actual in-water experiments in the recent past. While a number of design examples showed successful experiment in which the controller parameters are tuned empirically, it is clear that the result is limited to the case where couplings between vehicle modes are negligible. For a general case, the SISO approach is not agreeable with complex UUV vehicles with sophisticated control performance criteria. To develop a better controller, a model-based multivariable controller synthesis is desired.

In Ref.[1], a comparison study conducted for the control method of UUVs identified three viable control candidates: classical controllers, fuzzy logic and sliding mode. It was concluded that no one technique appears as the most promising, each controller has its advantages (e.g. performance) and disadvantages (e.g. complexity) that need to be considered carefully with skill and judgment by the designer to produce a suitable solution to the desired task.

The authors of Ref.[2] proposed an adaptive fuzzy logic controller for the Variable Buoyancy System (VBS) of an Autonomous Underwater Vehicle (AUV). The depth controllers bring the AUV to a desired depth by decreasing buoyancy, then descending to the desired depth and then restoring neutral buoyancy. In this approach, fuzzy rules are used to adaptively determine the critical depth points for ballast adjustment based on a key parameter of the AUV dynamic model. The use of fuzzy logic for a depth control of UUVs is also reported in Ref. [3]. A fuzzy logic controller was designed and tested in simulation that issues pump commands to effect changes in the UUV depth, while also regulating the pitch angle of the vehicle. Meanwhile, authors of Ref.[4] proposed an on-line learning control of autonomous underwater vehicles using feedforward neural networks. In this scheme, the dynamics of the controlled vehicle need not be fully known. The controller with the aid of a gain layer learns the dynamics and adapts fast to give the correct control action. The use of $H\infty$ for submarine depth control under wave disturbance is proposed in Ref. [5]. The design was developed by combining the polynomial and state-space approaches to allow the use of available commercial software. Overall, based on the requirement of dynamics model, the control of UUVs reported in the literature can be categorized into three different classifications. The first category is when no model is used and the control can be designed using classical approach in which the gains are tuned empirically or by using fuzzy logic as reported in Refs [2-3]. The second category is when only partial knowledge of dynamics is required and the rest is learned online. The example is this type of approach is given in Ref.[4]. Finally, the most general approach is when a dynamics model is first developed and the controller is designed based on the model such as illustrated in Ref.[5].

The present work is concerned with a model-based robust control synthesis using the novel coefficient diagram method. The paper is organized as follows. The UUVs longitudinal dynamics are described in Section II, and a numerical example is presented for Autonomous Underwater Vehicle (AUV) Squid developed at Center for Unmanned System Studies, Institut Teknologi Bandung [6]. A brief introduction of the CDM, together with a design example, is presented in Section III. A robustness analysis using Kharitonov's method is presented Section IV. Some simulation results are included in Section V. Finally, the concluding remarks end the paper.

.

## II. Dynamic Model of UUV

The equations of motion of UUV contain three elements: vehicle kinematics, rigid body dynamics and vehicle mechanics.

A. Budiyono is with the Department of Aerospace Information Technology, Konkuk University, Seoul, South Korea 143-701 (phone: 82-2-450-3817; fax: 82-2-444-6670; e-mail: agus@konkuk.ac.kr). The author was supported by the MKE (Ministry of Knowledge Economy), Korea, under the ITRC (Information Technology Research Center) support program supervised by the IITA (Institute for Information Technology Advancement) (IITA-2009-C1090-0902-0026)

Open Science Index, Mechanical and Mechatronics Engineering Vol:3, No:12, 2009 publications.waset.org/8646.pdf

The center of gravity is taken as the origin for body coordinate system used for deriving the equations of motion. Interested readers can find more complete derivation in Ref.[7].

### A. Kinematics of UUV

Two coordinate systems are used in describing the motion of UUV: Earth inertial system (fixed frame) and body coordinate (moving frame). The relation between Euler angular rates and angular velocities with respect to body frame is given by

$$\boldsymbol{\Omega} = \begin{Bmatrix} p \\ q \\ r \end{Bmatrix} \begin{bmatrix} 1 & 0 & -\sin\theta \\ 0 & \cos\phi & \sin\phi\cos\theta \\ 0 & -\sin\phi & \cos\phi\cos\theta \end{bmatrix} \begin{Bmatrix} \dot{\phi} \\ \dot{\theta} \\ \dot{\psi} \end{Bmatrix} \tag{1}$$

or

$$\begin{Bmatrix} \dot{\phi} \\ \dot{\theta} \\ \dot{\psi} \end{Bmatrix} = \begin{bmatrix} 1 & \sin\phi\tan\theta & \cos\phi\tan\theta \\ 0 & \cos\phi & -\sin\theta \\ 0 & \sin\phi\sec\theta & \cos\phi\sec\theta \end{bmatrix} \begin{Bmatrix} p \\ q \\ r \end{Bmatrix} \tag{2}$$

### B. Dynamics of UUV as a Rigid Body

The description of forces equation for a vehicle moving in inertial frame of reference is given by Euler-Newton equation:

$$\boldsymbol{F} = \frac{d}{dt}(m\boldsymbol{U}) \tag{3}$$

Assuming the vehicle mass is constant and the forces are evaluated with respect to body frame which moves with respect to the inertial frame of reference, the expression can be rewritten as

$$\boldsymbol{F} = m\left( \left(\frac{d\boldsymbol{U_o}}{dt}\right)_{xyz} + \boldsymbol{\Omega} + \boldsymbol{U_o} + \frac{d\boldsymbol{\Omega}}{dt} \times \boldsymbol{r}_G + \boldsymbol{\Omega} \times (\boldsymbol{\Omega} \times \boldsymbol{r}_G) \right) \tag{4}$$

the forces equation can be decomposed into three scalar components:

$$\begin{aligned} X &= m[\dot{u} + wq - vr - Cx_G] \\ Y &= m[\dot{v} + ur - wp - Cy_G] \\ Z &= m[\dot{w} + vp - uq - Cz_G] \end{aligned} \tag{5}$$

where

$$Cx_G = [-Cxx_G(q^2 + r^2) + y_G(pq - \dot{r}) + z_G(pr + \dot{q})]$$
$$Cy_G = [-y_G(r^2 + p^2) + z_G(qr - \dot{p}) + x_G(qp + \dot{r})]$$
$$Cz_G = [-z_G(p^2 + q^2) + x_G(rp - \dot{q}) + y_G(rq + \dot{p})]$$

By the same token, the moments equation read

$$\begin{aligned} \boldsymbol{h_x} &= p\int_\nabla (y^2 + z^2)\,dm - q\int_\nabla xy\,dm - z\int_\nabla xz\,dm \\ \boldsymbol{h_y} &= -p\int_\nabla xy\,dm + q\int_\nabla (z^2 + x^2)\,dm - r\int_\nabla yz\,dm \\ \boldsymbol{h_z} &= -p\int_\nabla xz\,dm - q\int_\nabla yz\,dm + r\int_\nabla (x^2 + y^2)\,dm \end{aligned} \tag{6}$$

All tables and figures you insert in your document are only to help you gauge the size of your paper, for the convenience of the referees, and to make it easy for you to distribute preprints.

### C. Dynamics Modeling of UUV

At this stage, to express the external forces and moments that works on a UUV. In general, they can be written in terms of the following contributions:

$$\boldsymbol{F} = \boldsymbol{F}_{G-B} + \boldsymbol{F}_{added\ mass} + \boldsymbol{F}_{ss} + \boldsymbol{F}_{prop} + \boldsymbol{F}_{cont} \tag{7}$$

$$\boldsymbol{M} = \boldsymbol{M}_{G-B} + \boldsymbol{M}_{added\ mass} + \boldsymbol{M}_{ss} + \boldsymbol{M}_{prop} + \boldsymbol{M}_{con} \tag{8}$$

**Gravity and Buoyancy Forces and Moments**

The first components of forces and moments come from gravity and buoyancy representing hydrostatic forces. Expressed in the body frame, the hydrostatic forces and moments can be written as:

$$\boldsymbol{F}_{G-B} = g(m - \rho\nabla)(-\sin\theta\,\boldsymbol{i} + \sin\phi\cos\theta\,\boldsymbol{j} + \cos\phi\cos\theta\,\boldsymbol{k}) \tag{9}$$

$$\boldsymbol{M}_{G-B} = g\{((my_G - \rho\nabla y_B)\cos\phi\cos\theta - (mz_G - \rho\nabla z_B)\sin\phi\cos\theta)\boldsymbol{i} - ((mz_G - \rho\nabla z_B)\sin\theta + (mx_G - \rho\nabla x_B)\cos\phi\cos\theta)\boldsymbol{j} - ((mx_G - \rho\nabla x_B)\sin\phi\cos\theta + (my_G - \rho\nabla y_B)\sin\theta)\boldsymbol{k}\} \tag{10}$$

**Added Mass Forces and Moments**

The second components are from added mass which is the hydrodynamic force due to the acceleration of the vehicle. For a general body, the added mass is given in terms of tensor with elements of *Aij* representing the magnitude of the added mass in the –*i* direction due to acceleration in the –*j* direction. The values of *i*,*j* from 1 to 3 represents the masses associated with surge, sway and heave motions while those from 4 to 6 the moment of inertias associated with roll, pitch and yaw motions. In terms of the equivalent derivative coefficients:

$$Added\ Mass = -\begin{bmatrix} X_{\dot{u}} & 0 & 0 & 0 & 0 & 0 \\ 0 & Y_{\dot{v}} & 0 & 0 & 0 & N_{\dot{v}} \\ 0 & 0 & Z_{\dot{w}} & 0 & M_{\dot{w}} & 0 \\ 0 & 0 & 0 & K_{\dot{p}} & 0 & 0 \\ 0 & 0 & Z_{\dot{q}} & 0 & M_{\dot{q}} & 0 \\ 0 & Y_{\dot{r}} & 0 & 0 & 0 & N_{\dot{r}} \end{bmatrix} \tag{11}$$

**Steady-state Forces and Moments**

The steady-state forces and moments are the result of viscous fluid effect and are usually calculated based on semi-empirical/empirical formula or model testing. Multivariate Taylor series expansion around equilibrium point is used to describe the forces and moments. In this approach, it is assumed that the force and moment are function of velocity only:

$$X_s(U_0 + u^*, v, w, p, q, r) = X_0 + \left(u\frac{\partial}{\partial u} + v\frac{\partial}{\partial v} + w\frac{\partial}{\partial w} + p\frac{\partial}{\partial p} + q\frac{\partial}{\partial q} + r\frac{\partial}{\partial r}\right)X_0 + \frac{1}{2!}\left(u\frac{\partial}{\partial u} + v\frac{\partial}{\partial v} + w\frac{\partial}{\partial w} + p\frac{\partial}{\partial p} + q\frac{\partial}{\partial q} + r\frac{\partial}{\partial r}\right)^2 X_0 + \cdots \tag{12}$$

where $X_0 = X_s(U_0, 0,0,0,0,0)$

Open Science Index, Mechanical and Mechatronics Engineering Vol:3, No:12, 2009 publications.waset.org/8646.pdf

and

$$\left(u\frac{\partial}{\partial u}+v\frac{\partial}{\partial v}+w\frac{\partial}{\partial w}+\cdots\right)^2 = u^2\frac{\partial^2}{\partial u^2}+v^2\frac{\partial^2}{\partial v^2}+ w^2\frac{\partial^2}{\partial w^2}+\cdots \quad (13)$$

**Propulsion Forces and Moments**

The AUV Squid has propeller-based thrusters. For this type of propulsion, the thrust is function of velocity $U_A$ and the number of blade *n*.

$$K_T = \frac{T}{\rho n^2 D^4} = f\left(J = \frac{U_A}{nD}\right) \quad (14)$$

Where $K_T$ is thrust coefficient, $J$ = advance ratio, $\rho$ = fluid density, and D = propeller diameter. The thrust coefficient can be expressed in terms of cubic of advance ration.

$$K_T = \tau_0 + \tau_1 J + \tau_2 J^2 + \tau_3 J^3 \quad (15)$$

Coefficient of the advance ratio is function of number of blades, pitch-diameter ratio and blade area. The thrust can then be calculated as:

$$T = \rho\left(n^2 D^4 \tau_0 + nD^3\tau_1 U_A + D^2\tau_2 {U_A}^2 + \frac{D\tau_3}{n}{U_A}^3\right) \quad (16)$$

and

$$\begin{aligned} X_p &= \sum(1-t_i)\,T_i\cos(\varepsilon_i) \\ X_z &= \sum(1-t_i)\,T_i\sin(\varepsilon_i) \\ M_p &= X_p z_p \end{aligned} \quad (17)$$

where $U_A = u - uw$

**Control Forces and Moments**

The control of AUV Squid is provided by differential thrust from three different thrusters. The use of thruster for the control in the longitudinal mode is described in Table I. For longitudinal mode maneuver, thruster 2 and 3 can be used simultaneously for the same differential thrust. Note that for pitch-up or pitch-down maneuver, all three thrusters can also be used simultaneously.

TABLE I

THRUSTER CONTROL IN LONGITUDINAL MODE

| Thruster | Maneuver | Control Input |
|---|---|---|
| $T_1$ | pitch up | reduction of thrust, $-\delta T_1$ |
| | pitch down | increase of thrust, $+\delta T_1$ |
| $T_2, T_3$ | pitch up | increase of thrust, $+\delta T_{2,3}$ |
| | pitch down | reduction of thrust, $-\delta T_{2,3}$ |

Following the description of control for AUV Squid as given in Table 1, each thrust can be expressed as:

$$T_i = T_{0_i} + \delta T_i \quad (18)$$

In this case, the propulsion force can be given as:

$$\begin{aligned} X_p &= \sum X_{p_i} = \sum(1-t_i)\left(T_{0_i}+\delta T_i\right) \\ X_p &= \sum X_{p_i} = \sum(1-t_i)\,T_{0_i} + \sum(1-t_i)\,\delta T_i \end{aligned} \quad (19)$$

The control force and moment can therefore be written as:

$$\begin{aligned} X_c &= \sum(1-t_i)\,\delta T_i \\ M_c &= \sum(1-t_i)\,\delta T_i\, z_{p_i} \qquad for\ i = 1,2,3 \end{aligned} \quad (20)$$

or

$$\begin{aligned} X_c &= (1-t)\delta T_1 + (1-t)\delta T_2 + (1-t)\delta T_3 \\ M_c &= (1-t)\delta T_1 z_{p_1} + (1-t)\delta T_2 z_{p_2} + (1-t)\delta T_3 z_{p_3} \end{aligned} \quad (21)$$

**Equations of Motion in Longitudinal Mode**

Using the expression for the forces and moments contribution from gravity, buoyancy, added-mass, propulsion and control, the equations of motion of the AUV Squid can be formulated. For longitudinal case the expression of forces and moments working on AUV Squid is summarized in Table II.

The control term contains three differential thrusters: $\delta T_1, \delta T_2\ and\ \delta T_3$.

TABLE II

LINEAR MODEL FOR LONGITUDINAL DYNAMICS

| Linearization Results | |
|---|---|
| *Inertial* | $X = m\dot{u}_1 + mz_G\dot{q}_1$<br>$Z = m\dot{w}_1 - mx_G\dot{q}_1 - mU_o q_1$<br>$M = I_{yy}\dot{q}_1 + mz_G\dot{u}_1 - mx_G\dot{w}_1 + mx_G U_o q_1$ |
| *Hydrostatics* | $X_{G-B} = X_\theta\theta_1 \quad ; X_\theta = -g(m-\rho\nabla)$<br>$Z_{G-B} = 0$<br>$M_{G-B} = \theta_1 \quad ; M_\theta = -g(mz_G - \rho\nabla z_B)$ |
| *Added Mass* | $X_A = X_{\dot{u}}\dot{u}_1$<br>$Z_A = Z_{\dot{w}}\dot{w}_1 + Z_{\dot{q}}\dot{q}_1 + X_{\dot{u}}U_0 q_1$<br>$M_A = M_{\dot{w}}\dot{w}_1 + M_{\dot{q}}\dot{q}_1 - (Z_{\dot{w}} - X_{\dot{u}})U_0 w_1 - Z_{\dot{q}}U_0 q_1$ |
| *Steady States* | $X_s = a_0$<br>$Z_s = c_1 w_1 + c_2 q_1$<br>$M_s = e_1 w_1 + e_2 q_1$ |
| *Propulsions* | $X_p \approx -a_0, and\ \ a_0 + X_p = a_{00}u_1 + a_{01}{u_1}^2 + \cdots \approx a_{00}u_1$<br>$M_p = a_{00}\left(z_{p_1} + z_{p_2} + z_{p_3}\right)u_1$ |
| *Controls* | $X_c = (1-t)\delta T_1 + (1-t)\delta T_2 + (1-t)\delta T_3$<br>$M_c = (1-t)z_{p_1}\delta T_1 + (1-t)z_{p_2}\delta T_2 + (1-t)z_{p_3}\delta T_3$ |
| *Kinematics* | $\dot{\theta} = q$ |

## III. Coefficient Diagram Method

### A. Working Principle

The mathematical model of the CDM design is described in general as a block diagram shown in Figure 1. In this figure, $r$ is the reference input signal, $u$ is the control signal, $d$ is the disturbance and $n$ is the noise generated by the measuring device at the output; N(s) and D(s) are the numerator and denominator polynomial of the plant transfer function, respectively. *A(s), F(s)* and *B(s)* are the polynomials associated with the CDM controller which are the denominator polynomial matrix of the controller, the reference and the

Open Science Index, Mechanical and Mechatronics Engineering Vol:3, No:12, 2009 publications.waset.org/8646.pdf

feedback numerator polynomial matrix of the controller respectively. For MIMO case, the variables and components are in the form of vectors and matrices with the appropriate dimension.

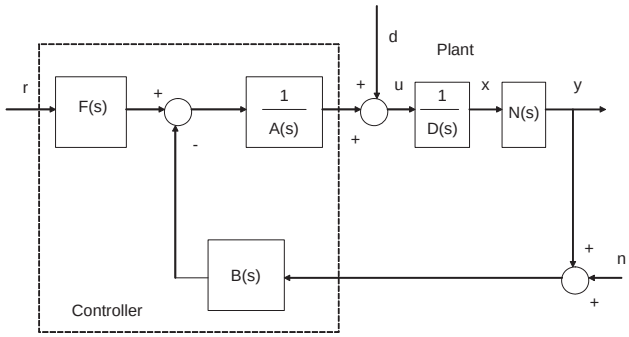


Fig. 1 CDM mathematical diagram

The plant equation is given by:

$$y = N(s)x$$
$$y = \frac{N(s)}{D(s)}(u + d) \tag{22}$$

which after some algebraic manipulation, can be completely written as:

$$y = \frac{N(s)F(s)}{P(s)}r + \frac{A(s)N(s)}{P(s)}d - \frac{N(s)B(s)}{P(s)}n \tag{23}$$

where $P(s)$ is the closed-loop system polynomial matrix expressed by:

$$P(s) = A(s)D(s) + B(s)N(s) = \sum_{i=0}^{n} a_i s^i \tag{24}$$

The characteristic polynomial $\Delta(s)$ is given by:

$$\Delta(s) = \det P(s) \tag{25}$$

To write the input-output relation of the system, the expression for the state and the controllers are needed. The controller equation can be written as:

$$A(s)u = F(s)r - B(s)(n + y) \tag{26}$$

Whereas the state equation can be obtained by eliminating u and y from the controller and output equations as follows:

$$P(s)x = F(s)r + A(s)d - B(s)n \tag{27}$$

Combining the output, state and controller equations, Eqs. (19),(22) and (23), the matrix input-output equation can finally be expressed as:

$$\begin{bmatrix} x \\ y \\ z \end{bmatrix} = \frac{1}{\Delta(s)} \begin{bmatrix} 1 \\ N(s) \\ D(s) \end{bmatrix} adjA(s)[F(s)r + A(s)d - B(s)n] - \begin{bmatrix} 0 \\ 0 \\ d \end{bmatrix} \tag{28}$$

### B. CDM design parameters

The design parameters in CDM are the stability indices $\gamma_i{}'s$, the stability limit indices $\gamma_i^{*}{}'s$ and the equivalent time constant, $\tau$. The stability index and the stability limit index determine the system stability and the transient behavior of the time domain response. In addition, they determine the robustness of the system to parameter variations. The equivalent time constant, which is closely related to the bandwidth, determines the rapidity of the time response. Those parameters are defined as follows:

$$\gamma_i = {a_i^2}/{(a_{i+1}a_{i-1})}, \quad i = 1,2 \dots, n-1$$
$$\tau = {a_i}/{a_0} \tag{29}$$
$$\gamma_i^* = {1}/{\gamma_{i+1}} + {1}/{\gamma_{i-1}}, \quad \gamma_0 = \gamma_n$$

where $a_i{}'s$ are coefficients of the characteristic polynomial. $\Delta(s)$ The equivalent time constant of the i-th order $\tau_i$ is defined in the same way as $\tau$.

$$\tau_i = a_{i+1}/a_i \tag{30}$$

By using the above equations, the relation between $\tau_i{}'s$ can be written as:

$${\tau_i}/{\tau_{i-1}} = {a_{i+1}}/{a_i}\ {a_{i-1}}/{a_i} = {1}/{\gamma_i} \tag{31}$$

Also, by simple manipulation, $a_i$ can be written as:

$$a_i = \tau_{i-1} \dots \tau_i \tau \tau_0$$
$$a_i = {a_0 \tau^i}/{\gamma_{i-1}\gamma_{i-2}^2 \dots \gamma_2^{i-2}\gamma_1^{i-1}}, \quad i \geq 2 \tag{32}$$

The characteristic polynomial can then be expressed as:

$$\Delta(s) = a_0 \left[ \left\{ \sum_{i=2}^{n} \left( \prod_{j=1}^{i-1} \frac{1}{\gamma_{i-j}^{j}} \right) (\tau s)^i \right\} + \tau s + 1 \right] \tag{33}$$

The sufficient condition for stability is given as:

$$a_i > 1.12 \left[ \frac{a_{i-1}}{a_{i+1}} a_{i+2} + \frac{a_{i+1}}{a_{i-1}} a_{i-2} \right]$$
$$\gamma_i > 1.12\gamma_i^*, \forall_i = 2,3 \dots, n-2 \tag{34}$$

And the sufficient condition for instability is:

$$a_{i+1}a_i \leq a_{i+2}a_{i-1}$$
$$\gamma_{i+1}\gamma_i \leq 1 \ \ for\ some\ i = 1, \dots, n-2 \tag{35}$$

### C. Design Example: Pitch Control of UUV

From the mathematical modeling in Section II, the state-space model for the longitudinal mode can be calculated for different speed and operation depth. The state space associated with speed $U_0 = 1.5\ m/s$ and $D = 50\ m$ is taken as a design example [8]. The state space equation can be written as:

$$\dot{\overline{x}} = A\overline{x} + B\overline{u} \tag{36}$$

where $\overline{x} = \{u, q, w, \theta\}$ is the state variable vector and $\overline{u} = \{\delta T_1, \delta T_2, \delta T_3\}$ is the control input variable vector. For the

Open Science Index, Mechanical and Mechatronics Engineering Vol:3, No:12, 2009 publications.waset.org/8646.pdf

above design point, the system matrix $A$ and control matrix $B$ are given by:

$$A = \begin{bmatrix} -0.6122 & 0 & 0 & 0.2935 \\ -0.0019 & -0.5633 & 0.1113 & 0.0066 \\ 0.0570 & 2.4393 & -0.4531 & -0.2014 \\ 0 & 0 & 1 & 0 \end{bmatrix} \quad (37)$$

$$B = \begin{bmatrix} 0.001669225 & 0.001669225 & 0.001669225 \\ 8.90925E-06 & -1.92728E-06 & -1.92728E-06 \\ -0.000273863 & 5.9243E-05 & 5.9243E-05 \\ 0 & 0 & 0 \end{bmatrix} \quad (38)$$

The controller is designed for the UUV to follow a pitch angle reference $\triangleleft_{\text{ref}}$ as depicted in Figure 3.

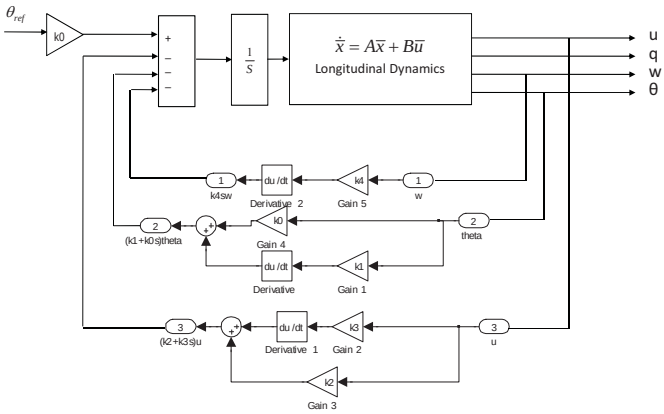


Fig. 2 Pitch control structure

Using the standard CDM procedures, the characteristic polynomial and four input-output relations from $\delta T_1$ input are derived as the following:

$$\begin{aligned} \Delta(s) &= s^5 + 1.6286s^4 + 0.8074s^3 + 0.1940s^2 + 0.0515 \\ N^u_{\delta T_1} &= 0.0017s^3 + 0.0017s^2 + 0.0002s + 0.0001 \\ N^q_{\delta T_1} &= 10^{-3}(-0.2739s^3 - 0.2050s^2 - 0.0353s) \\ N^w_{\delta T_1} &= 10^{-4}(0.0891s^3 - 0.2416s^2 - 0.0705s - 0.0002) \\ N^\theta_{\delta T_1} &= 10^{-3}(-0.2739s^2 - 0.2050s - 0.0353) \end{aligned} \quad (39)$$

Similar relations and the corresponding diagram can be drawn for $\delta T_2$ -output and $\delta T_3$ -output. They are not shown due to space limitation. Various PID controllers were compared and evaluated. One of the designs using $u$ and $\theta$ feedback is shown as in Figure 2 with $k_4 = 0$. Using the above diagram, it can be observed that the PID controller is chosen such that:

$$s\delta T_1 = k_0\theta_r - [(k_0 + k_1 s)\theta + (k_2 + k_3 s)u] \quad (40)$$

The new characteristic polynomial $P(s)$ then becomes:

$$\begin{aligned} P(s) &= s\Delta(s) + (k_0 + k_1 s)N^\theta_{\delta T_1} + (k_2 + k_3 s)N^u_{\delta T_1} \\ P(s) &= s^5 + a_4 s^4 + a_3 s^3 + a_2 s^2 + a_1 s + a_0 \end{aligned} \quad (41)$$

The synthesis leads to the following Diophantine equations to be solved for the control gain $k_0, k_1, k_2$ *and* $k_3$:

$$\begin{aligned} &0.8 + 0.00166k_2 - 0.00027k_1 + 0.0017k_3 = a_3 \\ &0.00023k_3 - 0.0002k_1 + 0.193 - 0.0003k_0 + 0.0017k_2 = a_2 \\ &0.05 - 0.00004k_1 + 0.0001k_3 - 0.0002k_0 + 0.0002k_2 = a_1 \\ &0.0001k_2 - 0.000035k_0 = a_0 \end{aligned} \quad (42)$$

The values for the coefficients of the characteristic polynomial in the right hand side are:

$$\begin{aligned} a_0 &= 1.16e-4 \\ a_1 &= \ \ 0.0034 \\ a_2 &= 0.039 \\ a_3 &= 0.234 \end{aligned} \quad (43)$$

The result is the following set of control gains:

$$\begin{aligned} k_0 &= -3.65 \\ k_1 &= \ \ 461 \\ k_2 &= -0.09 \\ k_3 &= -263 \end{aligned} \quad (44)$$

Overall design process can be summarized as the following algorithm.

1. The $\gamma$ 's values (e.g. ones given by Manabe) are chosen.

   $$\gamma_n = \gamma_{n-1} = \gamma_{n-2} \cdots = \gamma_2 = 2, \quad \gamma_1 = 2.5$$

   From the selected $\gamma$ 's values, we can determine the value of the coefficient for desired CL-polynomials: *a0, a1, …$a_n$* from the following relation.

   $$\gamma_i = \frac{a_i^2}{(a_{i+1}a_{i-1})}, \quad i = 1, 2, \cdots, n-1$$

   $$\tau = \frac{a_1}{a_0}$$

2. From the above relation, instead of expressing $\gamma$ 's in terms of *a's*, we can express *a*'s in terms of $\gamma$ 's as follows:

   $$a_n = 1$$

   $$a_{n-1} = \frac{\gamma_{n-1}\gamma_{n-2}\cdots\gamma_1}{\tau} a_n$$

   $$a_{n-2} = \frac{a_{n-1}^2}{\gamma_{n-1}a_n}$$

   $$a_{n-3} = \frac{a_{n-2}^2}{\gamma_{n-2}a_{n-1}}$$

   $$\vdots$$

   $$a_0 = \frac{a_1^2}{\gamma_1 a_2}$$

3. In using the above relation, the key step is the selection of the equivalent time constant τ. The determination of the time constant is guided by the design target parameter, settling time $\tau_s$.
   The parameters is related as follows :

Open Science Index, Mechanical and Mechatronics Engineering Vol:3, No:12, 2009 publications.waset.org/8646.pdf

$\tau_s = (2.5-3)\tau$

4. The determination of the settling time itself should naturally be guided by the knowledge about the basic dynamic properties of the vehicle. For UUV, for instance, there will be a minimum for the desired settling time. The limit is a function of different vehicle parameters (mass, moment of inertia, geometry, engine power, propulsion time response, etc.) all of which determine the dynamic characteristic of the vehicle.
5. Once the initial τ is determined, the coefficient of desired CL polynomial can be calculated.
6. A control structure can then be chosen. A good start will be a simple PID control. Using the CDM diagram, e.g. we can observe that our problem boils down to choosing the PID controller such that:
$$s\delta T_1 = k_0\theta_r - [(k_0 + k_1 s)\theta + (k_2 + k_3 s)u]$$
7. From the above relation, the CL characteristic polynomial can be expressed and compared to the target CL characteristic polynomial, e.g.:
$$P(s) = s\Delta(s) + (k_0 + k_1 s)N^{\theta}_{\delta T_1} + (k_2 + k_3 s)N^{u}_{\delta T_1}$$
$$P(s) = s^5 + a_4 s^4 + a_3 s^3 + a_2 s^2 + a_1 s + a_0$$
8. Comparison of the coefficients of the target CL and the designed CL characteristic polynomial yields Diophantine equation that can be solved for control gains.
9. The control parameters $k_0, k_1, \ldots k_n$ then are used for the simulation of the controlled system due to specified input (step, impulse or doublet). We can observe the time response properties (time settling, overshoot, etc) and judge whether we have achieved the desired control performance or we need to adjust the initial value of equivalent time constant. Inherently, there is a trade-off between the achievement for desired settling time and level of overshoot. In this case, the above steps can be simply repeated accordingly.

## IV. Robustness Analysis

Robustness analysis is done to evaluate the performance of the controller due to modeling uncertainties. Since the control synthesis has been carried out in the polynomial ring, it is instructive to address the robustness issue in same domain. When uncertainties exist in one or a number of model parameters, it gives rise to a closed-loop polynomial in which the coefficients are given in terms of intervals. A robust stability problem is defined as the determination of stability of a given set of polynomials associated with closed loop polynomial whose coefficients are uncertain. It is clear that we cannot check all polynomials because the set is generally infinite. Therefore a viable way to check only a finite number of polynomials to determine the stability of an infinite set is desirable. The Kharitonov approach shows that for a set of 'interval' polynomials, the robust stability problem can be solved by checking only four polynomials. The procedure can be summarized as follows [9]:

Given a set of polynomials:
$$\varphi(s,p) = p_o + p_1 s + p_2 s^2 + \cdots + p_{n-1}s^{n-1} + p_n s^n$$
where $p_i \in [p_i^-, p_i^+], i = 0,1,\ldots,n-1,n$ are coefficients whose values are uncertain. We would like to know if all the polynomials in the set are stable, that is, if the set is robustly stable. In other words, let
$$p = [p_0, \ldots, p_4]$$
be the vector of uncertain coefficients, and
$$P = [p_0^-, p_0^+] \times \ldots \times [p_4^-, p_4^+]$$
be the set of possible values of $p$. Define a set of admissible polynomials:
$$\Psi(s,p) = \{\varphi(s,p) : p \in P\}$$
To check if for all $\varphi(s,p) \in \Psi(s,p)$, $\varphi(s,p)$ is stable, the following four Kharitonov polynomials are checked:

$$K_1(s) = p_0^- + p_1^- s + p_2^+ s^2 + p_3^+ s^3 + p_4^- s^4 + p_5^- s^5 + \ldots$$
$$K_2(s) = p_0^- + p_1^+ s + p_2^+ s^2 + p_3^- s^3 + p_4^- s^4 + p_5^+ s^5 + ..$$
$$K_3(s) = p_0^+ + p_1^- s + p_2^- s^2 + p_3^+ s^3 + p_4^+ s^4 + p_5^- s^5 + ..$$
$$K_4(s) = p_0^+ + p_1^+ s + p_2^- s^2 + p_3^- s^3 + p_4^+ s^4 + p_5^+ s^5 + ..$$
The Kharitonov theorem states that the stability of the above four polynomials is necessary and sufficient for the stability of all polynomials in the infinite set of $\Psi(s,p)$.

## V. Simulation Results

To investigate the robustness of the proposed CDM controller, a number of pertinent stability derivatives are assumed to be uncertain. For our case study, there exists ±30% uncertainties in the value of $x_u$ and $m_q$. The performance of pitch control synthesized in Section III in coping with these uncertainties is illustrated in Figs. 3-6.

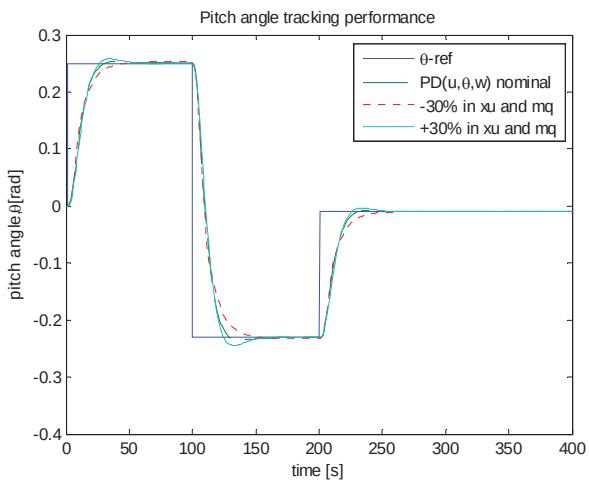


Fig. 3 Pitch angle tracking performance in the presence of uncertainties

Open Science Index, Mechanical and Mechatronics Engineering Vol:3, No:12, 2009 publications.waset.org/8646.pdf

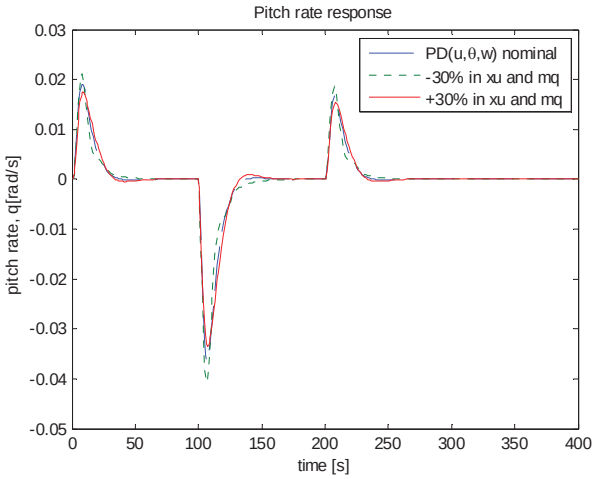


Fig. 4 Pitch rate response in the presence of uncertainties

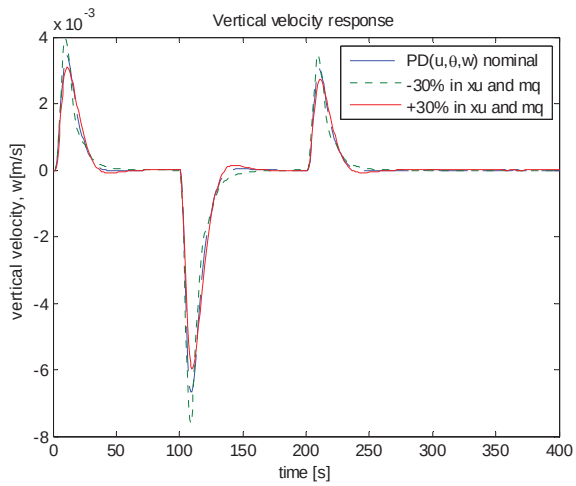


Fig. 5 Vertical velocity response in the presence of uncertainties

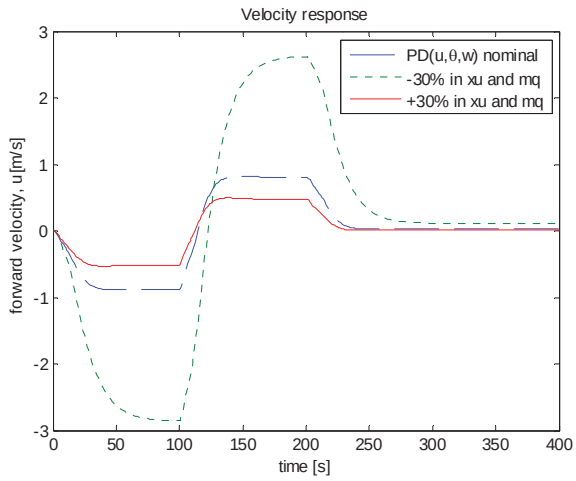


Fig. 6 Forward velocity in the presence of uncertainties

The corresponding closed-loop polynomials due to the uncertainties are illustrated in Fig. 7. It is evident that even though the control seems to be able to cope with the parameter uncertainties, Fig. 6 indicates that forward velocity response due to 30% decrease in the value of $x_u$ and $m_q$ is not desirable. We want to check quantitatively the robustness level based on Kharitonov perspective.

The nominal closed-loop polynomial based on the synthesis in Section III can be written as:

$$\varphi(s) = 0.0018 + 0.0310s + 0.2090s^2 + 0.7044s^3 + 1.1869s^4 + s^5$$

Whereas the corresponding closed-loop polynomial for -30% and +30% uncertainties in the value of of $x_u$ and $m_q$ is respectively given by:

$$\varphi_(s) = 0.0006 + 0.0149s + 0.1202s^2 + 0.4625s^3 + 0.8674s^4 + s^5$$

$$\varphi_+(s) = 0.0031 + 0.0471s + 0.3207s^2 + 0.9963s^3 + 1.5065s^4 + s^5$$

The vector of uncertain coefficients is given by:

$$p = [p_0, \ldots, p_4]$$

where the set of possible values of p is given as

$$P = [p_0^-, p_0^+] \times \ldots \times [p_4^-, p_4^+]$$
$$= [0.0006, 0.0031] \times [0.0149, 0.0471] \times [0.1202, 0.3207] \times [0.4625, 0.9963] \times [0.8674, 1.5065]$$

To check if for all $\varphi(s,p) \in \Psi(s,p)$, $\varphi(s,p)$ is stable, the following four Kharitonov polynomials are checked:

$$K_1(s) = p_0^- + p_1^- s + p_2^+ s^2 + p_3^+ s^3 + p_4^- s^4 + p_5^- s^5 + \ldots$$
$$K_2(s) = p_0^- + p_1^+ s + p_2^+ s^2 + p_3^- s^3 + p_4^- s^4 + p_5^+ s^5 + ..$$
$$K_3(s) = p_0^+ + p_1^- s + p_2^- s^2 + p_3^+ s^3 + p_4^+ s^4 + p_5^- s^5 + ..$$
$$K_4(s) = p_0^+ + p_1^+ s + p_2^- s^2 + p_3^- s^3 + p_4^+ s^4 + p_5^+ s^5 + ..$$

which correspond to checking the stability of:

$$K_1(s) = 0.0006 + 0.0149s + 0.3207s^2 + 0.9963s^3 + 0.8674s^4 + s^5$$
$$K_2(s) = 0.0006 + 0.0471s + 0.3207s^2 + 0.4625s^3 + 0.8674s^4 + s^5$$
$$K_3(s) = 0.0031 + 0.0149s + 0.1202s^2 + 0.9963s^3 + 1.5065s^4 + s^5$$
$$K_4(s) = 0.0031 + 0.0471s + 0.1202s^2 + 0.4625s^3 + 1.5065s^4 + s^5$$

The eigen value of the above polynomial are given as follows:

| $K_1(s)$: | $K_2(s)$: | $K_3(s)$: | $K_4(s)$: |
|---|---|---|---|
| -0.2371 + 0.8575i | -0.7196 | -0.6919 + 0.5795i | -1.1718 |
| -0.2371 - 0.8575i | 0.0157 + 0.5995i | -0.6919 - 0.5795i | 0.0566 + 0.2980i |
| -0.3459 | 0.0157 - 0.5995i | -0.1775 | 0.0566 - 0.2980i |
| -0.0236 + 0.0388i | -0.1660 | 0.0274 + 0.1442i | -0.3696 |
| -0.0236 - 0.0388i | -0.0132 | 0.0274 - 0.1442i | -0.0782 |

From the above results it is evident that the proposed control is not robustly stable for the ±30% uncertainties in the value of $x_u$ and $m_q$. The result is agreeable with the time response depicted in Fig. 6. Further analysis using Kharitonov can show that the proposed synthesized CDM control can cope with up to -10% uncertainties in the value of $x_u$ and $m_q$. (Note that only lower boundary matters since positive uncertainties essentially provide more damping to the system). To achieve a controller which can cope with up to -30% uncertainties, the controller

need to be redesigned. In this case, different set of values of $\gamma$'s can be chosen. The procedure of design can follow the algorithm given in Section III.

## VI. Concluding Remarks

The paper deals with the application of coefficient diagram method (CDM) for a robust control design of an autonomous underwater vehicle. The CDM is an algebraic approach in which the characteristic polynomial and the controller are synthesized simultaneously. Particularly, a coefficient diagram is used to convey pertinent design information and as a measure of trade-off between stability, response speed and robustness. The effectiveness of the approach is shown by the design of pitch controller of an AUV. The robustness of the synthesized control due to parametric uncertainties is evaluated by using Kharitonov method. It is demonstrated that Kharitonov polynomial can be effectively used for quantifying the robustness level of the controller.

.

## Acknowledgment

The author would like to acknowledge an insightful discussion regarding Kharitonov polynomials with Dr. Endra Joelianto at the Department of Engineering Physics, Institut Teknologi Bandung, Indonesia.

## References

[1] R. K. Lea, R. Allen and S. L.Merry, "A comparative study of control techniques for an underwater flight vehicle," *International Journal of Systems Science*, volume 30, number 9, 1999, pp. 947- 964

[2] M.Xu, and S.M. Smith, "Adaptive fuzzy logic depth controller for variable buoyancy system of autonomous underwater vehicles," in *Proceedings of the 3rd IEEE Conference on Fuzzy Systems*, 1994, pp. 1191- 1196.

[3] P.A. DiBitetto, "Fuzzy logic for depth control of unmanned undersea vehicles," *IEEE Journal of Oceanic Engineering*, 20, 1995, pp. 242-248

[4] K.P. Venugopal, R. Sudhakar, and A.S. Pandya, "On-line learning control of autonomous underwater vehicles using feedforward neural networks," *IEEE Journal of Oceanic Engineering*, 17, 1992, pp. 308-319

[5] E. Liceaga-Castro, and G. van der Molen, "Submarine $H_\infty$ depth control under wave disturbances," *IEEE Journal of Oceanic Engineering*, 3, 1995, pp. 338-346.

[6] Muljowidodo, S.D. Jenie, A. Budiyono and S. Adinugroho,"Design, development and testing of underwater vehicles: ITB experience, " paper presented at The International Conference on Underwater System Technology: Theory and Application (USYS'06), Penang, Malaysia, 2006

[7] A. Budiyono, A. Sugama, Muljowidodo, and Sapto Adi Nugroho, "Dynamics analysis of AUV Sotong," paper presented at the 2nd International Conference on Underwater System Technology: Theory and Applications 2008 (USYS'08),Bali, Indonesia, 2008

[8] A. Budiyono, Muljowidodo and A. Sugama, "Coefficient Diagram Method for the Control of an Unmanned Underwater Vehicle," *Indian J Mar Sci*., **38**(3):316-323, Sept. 2009

[9] F. Lin, *Robust Control Design : An Optimal Control Approach*. West Sussex: John Wiley & Sons, 2007, ch. 7

Open Science Index, Mechanical and Mechatronics Engineering Vol:3, No:12, 2009 publications.waset.org/8646.pdf