World Academy of Science, Engineering and Technology
International Journal of Electrical and Computer Engineering
Vol:4, No:10, 2010

Steady State of Passive and Active Suspensions in the Physical Domain

Gilberto Gonzalez-A[1], Jorge Madrigal[2]

***Abstract*— The steady state response of bond graphs representing passive and active suspension is presented. A bond graph with preferred derivative causality assignment to get the steady state is proposed. A general junction structure of this bond graph is proposed. The proposed methodology to passive and active suspensions is applied.**

Keywords– Bond graph, steady state, active suspension.

I. Introduction

THE mayority of today´s vehicles utilize traditional passive suspension systems. Passive suspensions comprise of a mechanical spring and a shock absorber to disipate the vertical of the vehicle. For the past few decades, semi-active suspensions and fully active suspension systems have been under investigation. Semi-active suspensions incorporate variable damping whose rate usually depends on one or more vehicles states. Therefore, they are similar to passive suspensions in that they do not require an external energy source to create a force. However, semi-active suspensions require some energy to operate sensors and valves. Fully active suspensions have force-producing components (actuators) that impart a force or torque to support the weight of the vehicle and control its dynamic motion through their connection to the wheel hubs or suspension control arms.

Main suspension system functions are to maintain the wheels in contact with the ground, transmit tyre forces, and filter road excitations. In conjunction with axles, suspension systems form the link between wheels and vehicle body. There are different axle-suspension system types (McPherson, pseudo-McPherson, trailing arms, multi-arms, etc) and their kinematics are somewhat complex to model in a multibody system context.

The bond graph technics are useful and important tools for physical system modelling [1]. They are based on power representation and enables the description of the system through energy storage and dissipative elements [2], [3].

In [4] an integrated approach for fuzzy systems, modeling and fuzzy optimal controller design of half-car active suspension systems to enhance the ride comfort of passengers. In [5] semi-active suspensions provide vibration suppression solutions for tonal and broadband applications with small amount of control and relatively low cost. An on-road analytical tire model has been developed to predict tire forces and moments at the tire/road interface in [6].

Manuscript received August 15th, 2010, Faculty of Electrical Engineering, University of Michoacan, Mexico, (e-mail: gilmichga@yahoo.com.mx[1], madrigal.salas@gmail.com[2]).

Several papers have been published on bond graph models of automotive. Hence, a 3-dimensional and a simpler 2-dimensional automobile model is established in order to analyse the handling response of steering variations using different sets of tyres in [7]. Also, a simple basic bond graph model of an automotive power train was developed to analyze the nature of the observed dominant mode oscillations in a typical manual transmission power train in [8] is proposed.

In [9] the bond graph model of a truck with eighteen degrees of freedom is created. The vehicle model analysis was not the objective, rather its purpose was to demostrate that bond graph representation can compete with other modelling tools in the field of vehicle dynamics in [10].

In other wise, when the dynamical behavior is over, the steady state is reached. In [11] is shown a bond graph procedure to get the equilibrium state. However, this result does not use the junction structure with assigned derivative causality. Hence, the steady state requires to invert the matrix A, when the system is represented in a realization (A, B, C, D). As shown in [12] it is possible to get the steady state from a bond graph in derivative causality.

In this paper, a junction structure more general in a derivative causality assignment is proposed. This junction structure allows to have storage elements in an integral causality assignment into the bond graph in derivative causality. The main contribution of this paper is to determine the steady state response of a passive and active suspension modelled by a Bond Graph.

Section II gives basic elements of the bond graph model. Section III proposes a junction structure of a bond graph in a derivative causality assignment, this structure allows to have storage elements in a derivative and integral causality. The steady state response of a passive suspension in the physical domain is proposed in section IV and in section V of an active suspension. Finally, section VII gives the conclusions.

II. Modelling in Bond Graph

The symbolic form of a bond graph in integral causality assignment (BGI) of a LTI system is shown in Fig. 1 [2], [3].

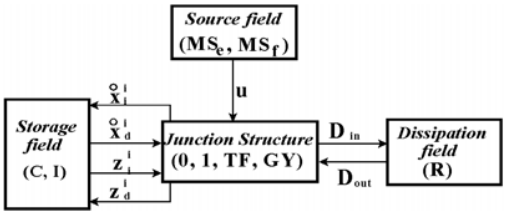

Fig. 1. Junction structure of the BGI.

In Fig. 1, (MS_e, MS_f), (I, C) and (R) denote the source, the energy storage and the energy dissipation fields, (D) the detector and $(0, 1, TF, GY)$ the junction structure with transformers, TF, and gyrators, GY.

The state $x_i^i(t) \in \Re^n$ and $x_d^i(t) \in \Re^m$ are composed of energy variables $p(t)$ and $q(t)$ associated with I and C elements in integral causality and derivative causality, respectively, $u(t) \in \Re^p$ denotes the plant input, $z_i^i(t) \in \Re^n$ the co-energy vector, $z_d^i(t) \in \Re^m$ the derivative co-energy and $D_{in}(t) \in \Re^r$ and $D_{out}(t) \in \Re^r$ are a mixture of $e(t)$ and $f(t)$ showing the energy exchanges between the dissipation field and the junction structure [2], [3].

The relations of the storage and dissipation fields are,

$$z_i^i = F_i^i x_i^i \quad (1)$$
$$z_d^i = F_d^i x_d^i \quad (2)$$
$$D_{out} = L D_{in} \quad (3)$$

The relations of the junction structure are,

$$\begin{bmatrix} \dot{x}_i^i \\ D_{in} \\ z_d^i \end{bmatrix} = \begin{bmatrix} S_{11} & S_{12} & S_{13} & S_{14} \\ S_{21} & S_{22} & S_{23} & 0 \\ S_{31} & 0 & 0 & 0 \end{bmatrix} \begin{bmatrix} z_i^i \\ D_{out} \\ u \\ \dot{x}_d^i \end{bmatrix} \quad (4)$$

The entries of S take values inside the set $\{0, \pm 1, \pm k_t, \pm k_g\}$ where k_t and k_g are transformer and gyrator modules; S_{11} and S_{22} are square skew-symmetric matrices and S_{12} and S_{21} are matrices each other negative transpose. The state space equations are [2], [3],

$$\dot{x}_i^i(t) = A x_i^i(t) + B u(t) \quad (5)$$

where

$$EA = (S_{11} + S_{12} M S_{21}) F_i^i \quad (6)$$
$$EB = S_{13} + S_{12} M S_{23} \quad (7)$$

being $M = (I - L_i S_{22})^{-1} L_i$ and $E = I - S_{14} (F_d)^{-1} S_{31} F_i^i$.

In the next section, a junction structure of a bond graph with a derivative causality assignment of a linear time invariant system is presented.

III. Steady State from a Bond Graph

A junction structure configuration of a bond graph of a Bond Graph with preferred Derivative causality assignment (BGD) is proposed in Fig. 2. This junction structure allows to represent systems that have storage elements in derivative and integral causality assignments.

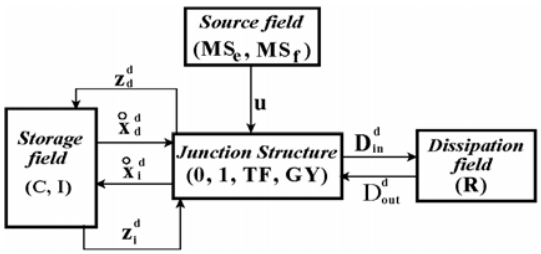

Fig. 2. Junction structure of a BGD.

In Fig. 2, the state $x_d^d \in \Re^q$ and $x_i^d \in \Re^h$ are composed of energy variables with derivative and integral causality assignments, respectively; $z_d^d \in \Re^q$, $z_i^d \in \Re^h$ are the co-energy variables in derivative and integral causality assignments, respectively; $D_{in}^d \in \Re^r$ and $D_{out}^d \in \Re^r$ are the dissipation field with preferred derivative causality assignment and $u \in \Re^p$ is the plant input.

In order to have a relationship between the BGI and BGD of a system, $q = n + m$. The relations of the storage and the dissipation fields in a BGD of a LTI system are:

$$z_d^d = F_d^d x_d^d \quad (8)$$
$$D_{out}^d = L^d D_{in}^d \quad (9)$$

The junction structure matrix for the proposed junction structure configuration of a BGD is defined in,

Lemma 1. *Let a bond graph model of a system with a preferred derivative causality assignment in the junction structure configuration of Fig. 2, then, a junction structure matrix J is,*

$$\begin{bmatrix} z_d^d \\ D_{in}^d \end{bmatrix} = \begin{bmatrix} J_{11} & J_{12} & J_{13} \\ J_{21} & J_{22} & J_{23} \end{bmatrix} \begin{bmatrix} \dot{x}_d^d \\ D_{out}^d \\ u \end{bmatrix} \quad (10)$$

that, is block partitioned accordingly with the dimensions of $\dot{x}_d^d$, D_{out}^d and u, and their entries take values inside the set $\{0, \pm 1, \pm r, \pm l\}$ where r and l are the transformer and gyrator coefficients, respectively. Then, equation (11) is directly obtained from (10),

$$z_d^d = A^* \dot{x}_d^d + B^* u \quad (11)$$

where

$$A^* = J_{11} + J_{12} M_d J_{21} \quad (12)$$
$$B^* = J_{13} + J_{12} M_d J_{23} \quad (13)$$

being

$$M_d = \left(I_r - L^d J_{22}\right)^{-1} L^d \quad (14)$$

Proof. In the BGD, from the second line of (10) and using (9), we have,

$$D_{in}^d = \left(I_r - J_{22} L^d\right)^{-1} \left[J_{21} \dot{x}_d^d + J_{23} u\right] \quad (15)$$

substituting (15) into the first line of (10) and using (9) we get,

$$z_d^d = \left[J_{11} + J_{12} M_d J_{21}\right] \dot{x}_d^d + \left[J_{13} + J_{12} M_d J_{23}\right] u \quad (16)$$

and the result (11) follows. ■

When a BGD has storage elements in integral and derivative causality assignment on the BGD, *i.e.*, $J_{14} \neq 0$ and $h \neq 0$. The A and A^* matrices are singular. The state space (A, B, C, D) does not have direct relation with (A^*, B^*, C^*, D^*) and $n + m = q + h$. Also, $x_i^{i \leftrightarrow d}$ are the storage elements in integral causality assignment on the BGI and they maintain the same causality on the BGD and $x_d^{i \leftrightarrow d}$ are the storage elements in derivative causality assignment on the BGI and BGD.This case is described by the following lemma:

Lemma 2. *Let a bond graph model of a LTI system with a preferred integral causality assignment whose junction structure can be written by,*

$$\begin{bmatrix} \dot{x}_{i\leftrightarrow d}^{i\leftrightarrow d} \\ \dot{x}_{i}^{i\leftrightarrow d} \\ - \\ D_{in}^{i} \\ - \\ z_{d}^{i\leftrightarrow d} \end{bmatrix} = \begin{bmatrix} S_{11}^{11} & S_{11}^{12} & S_{12}^{11} & S_{13}^{11} & S_{14}^{11} \\ S_{11}^{21} & S_{11}^{22} & S_{12}^{21} & S_{13}^{21} & S_{14}^{21} \\ - & - & - & - & - \\ S_{21}^{11} & S_{21}^{12} & S_{22}^{11} & S_{23}^{11} & 0 \\ - & - & - & - & - \\ S_{31}^{11} & S_{31}^{12} & 0 & 0 & 0 \end{bmatrix} \begin{bmatrix} z_{i\leftrightarrow d}^{i\leftrightarrow d} \\ z_{i}^{i\leftrightarrow d} \\ - \\ D_{out}^{i} \\ - \\ u \\ \dot{x}_{d}^{i\leftrightarrow d} \end{bmatrix} \tag{17}$$

where $x_i^i = \begin{bmatrix} x_{i\leftrightarrow d}^{i\leftrightarrow d} \\ x_i^{i\leftrightarrow d} \end{bmatrix}$; $z_i^i = \begin{bmatrix} z_{i\leftrightarrow d}^{i\leftrightarrow d} \\ z_i^{i\leftrightarrow d} \end{bmatrix}$; $x_i^i \in \Re^n$ *and* $x_d^{i\leftrightarrow d} \in \Re^m$. *The junction structure with a preferred derivative causality is,*

$$\begin{bmatrix} z_{i\leftrightarrow d}^{i\leftrightarrow d} \\ z_{d}^{i\leftrightarrow d} \\ - \\ D_{in}^{d} \\ - \\ \dot{x}_{d}^{i\leftrightarrow d} \end{bmatrix} = \begin{bmatrix} J_{11}^{11} & J_{11}^{12} & J_{12}^{11} & J_{13}^{11} & J_{14}^{11} \\ J_{11}^{21} & J_{11}^{22} & J_{12}^{21} & J_{13}^{21} & J_{14}^{21} \\ - & - & - & - & - \\ J_{21}^{11} & J_{21}^{12} & J_{22}^{11} & J_{23}^{11} & 0 \\ - & - & - & - & - \\ J_{31}^{11} & J_{31}^{12} & 0 & J_{33}^{11} & 0 \end{bmatrix} \begin{bmatrix} \dot{x}_{i\leftrightarrow d}^{i\leftrightarrow d} \\ \dot{x}_{d}^{i\leftrightarrow d} \\ - \\ D_{out}^{d} \\ - \\ u \\ z_{i}^{i\leftrightarrow d} \end{bmatrix} \tag{18}$$

where $x_d^d = \begin{bmatrix} x_{i\leftrightarrow d}^{i\leftrightarrow d} \\ x_d^{i\leftrightarrow d} \end{bmatrix}$, $z_d^d = \begin{bmatrix} z_{i\leftrightarrow d}^{i\leftrightarrow d} \\ z_d^{i\leftrightarrow d} \end{bmatrix}$; $x_d^d \in \Re^q$ *and* $x_i^{i\leftrightarrow d} \in \Re^h$. *Then, a reduced equivalent system is defined by,*

$$E_r^* z_{i\leftrightarrow d}^{i\leftrightarrow d} = A_r^* \dot{x}_{i\leftrightarrow d}^{i\leftrightarrow d} + B_r^* u + Q_r^* \int_0^t u(\tau)\, d\tau \tag{19}$$

where

$$A_r^* = A_{11}^* + A_{12}^* H_3 H_4 \tag{20}$$
$$B_r^* = B_1^* + A_{12}^* H_3 H_1 J_{33}^{11} \tag{21}$$
$$Q_r^* = J_{14}^{11} F_i^{i\leftrightarrow d} \left(I + J_{31}^{12} H_3 H_1\right) J_{33}^{11} \tag{22}$$
$$E_r^* = \left[I - J_{14}^{11} F_i^{i\leftrightarrow d} \left(J_{31}^{11} + J_{31}^{12} H_3 H_4\right)\right] \left(F_{i\leftrightarrow d}^{i\leftrightarrow d}\right)^{-1} \tag{23}$$

where the constitutive relations of the storage elements are

$$z_{i\leftrightarrow d}^{i\leftrightarrow d} = F_{i\leftrightarrow d}^{i\leftrightarrow d} x_{i\leftrightarrow d}^{i\leftrightarrow d} \tag{24}$$
$$z_{d}^{i\leftrightarrow d} = F_{d}^{i\leftrightarrow d} x_{d}^{i\leftrightarrow d} \tag{25}$$
$$z_{i}^{i\leftrightarrow d} = F_{i}^{i\leftrightarrow d} x_{i}^{i\leftrightarrow d} \tag{26}$$

with $H_1 = \left(F_d^{i\leftrightarrow d}\right)^{-1} \left[J_{14}^{21} - A_{21}^* \left(A_{11}^*\right)^{-1} J_{14}^{11}\right] F_i^{i\leftrightarrow d}$; $H_2 = \left(F_d^{i\leftrightarrow d}\right)^{-1} A_{21}^* \left(A_{11}^*\right)^{-1} F_{i\leftrightarrow d}^{i\leftrightarrow d}$; $H_3 = \left(I - H_1 J_{31}^{12}\right)^{-1}$; $H_4 = H_2 + H_1 J_{31}^{11}$; $H_5 = C_{11}^* + C_{12}^* H_3 H_4$; $B_1^* = J_{13}^{11} + J_{12}^{11} M_d J_{23}^{11}$; $C_{11}^* = J_{31}^{11} + J_{32}^{11} M_d J_{21}^{11}$; $C_{12}^* = J_{31}^{12} + J_{32}^{11} M_d J_{21}^{12}$; $D_p^* = J_{33}^{11} + J_{32}^{11} M_d J_{23}^{11}$; $A_{11}^* = J_{11}^{11} + J_{12}^{11} M_d J_{21}^{11}$; $A_{12}^* = J_{11}^{12} + J_{12}^{11} M_d J_{21}^{12}$; $A_{21}^* = J_{11}^{21} + J_{12}^{21} M_d J_{21}^{11}$ and $M_d = L^d \left(I_r - J_{22}^{11} L^d\right)^{-1}$.

Proof. In order to get an reduced equivalent system of this case, the following analysis is done. From the third line of (18) and substituting into the first line of the same equation,

$$z_{i\leftrightarrow d}^{i\leftrightarrow d} = A_{11}^* \dot{x}_{i\leftrightarrow d}^{i\leftrightarrow d} + B_1^* u + A_{12}^* \dot{x}_d^{i\leftrightarrow d} + J_{14}^{11} z_i^{i\leftrightarrow d} \tag{27}$$

where $A_{11}^* = J_{11}^{11} + J_{12}^{12} M_d J_{12}^{11}$; $A_{12}^* = J_{11} + J_{12}^{11} M_d J_{21}^{12}$; $B_1^* = J_{13}^{11} + J_{12}^{11} M_d J_{23}^{11}$ and $M_d = L^d \left(I_r - J_{22}^{11} L^d\right)^{-1}$. Similarly, the second line of (18) can be written by,

$$z_d^{i\leftrightarrow d} = A_{21}^* \dot{x}_{i\leftrightarrow d}^{i\leftrightarrow d} + B_2^* u + A_{22}^* \dot{x}_d^{i\leftrightarrow d} + J_{14}^{21} z_i^{i\leftrightarrow d} \tag{28}$$

where $A_{21}^* = J_{11}^{21} + J_{12}^{21} M_d J_{21}^{11}$; $A_{22}^* = J_{11}^{22} + J_{12}^{21} M_d J_{21}^{12}$ and $B_2^* = J_{13}^{21} + J_{12}^{21} M_d J_{23}^{11}$. From (27) and (28) then

$$\begin{aligned} z_d^{i\leftrightarrow d} &= A_{21}^* \left(A_{11}^*\right)^{-1} z_{i\leftrightarrow d}^{i\leftrightarrow d} + \left[B_2^* - A_{21}^* \left(A_{11}^*\right)^{-1} B_1^*\right] u \\ &\quad + \left[A_{22}^* - A_{21}^* \left(A_{11}^*\right)^{-1} A_{12}^*\right] \dot{x}_d^{i\leftrightarrow d} \\ &\quad + \left[J_{14}^{21} + A_{21}^* \left(A_{11}^*\right)^{-1} J_{14}^{11}\right] z_i^{i\leftrightarrow d} \end{aligned} \tag{29}$$

We can assign A^* as,

$$A^* = \begin{bmatrix} A_{11}^* & A_{12}^* \\ A_{21}^* & A_{22}^* \end{bmatrix} \tag{30}$$

which is a singular matrix. The A_{11}^* submatrix is nonsigular, because this part is due storage elements have integral causality on the BGI and have derivative causality on the BGD, $x_{i\leftrightarrow d}^{i\leftrightarrow d}$. Thus, we have

$$A_{22}^* - A_{21}^* \left(A_{11}^*\right)^{-1} A_{12}^* = 0 \tag{31}$$

Also, from (29),

$$B_2^* = A_{21}^* \left(A_{11}^*\right)^{-1} B_1^* \tag{32}$$

where B_2^* are causal paths from the inputs u to $z_d^{i\leftrightarrow d}$ on the BGD. However, these causal paths can be obtained by (32). That is, because the part $\left(A_{11}^*\right)^{-1} B_1^*$ means causal paths from the inputs u to $\dot{x}_{i\leftrightarrow d}^{i\leftrightarrow d}$ on the BGI. The submatrix $\left(A_{11}^*\right)^{-1}$ indicates to change BGD by BGI. Finally, A_{21}^* is the relationship between $\dot{x}_{i\leftrightarrow d}^{i\leftrightarrow d}$ and $z_d^{i\leftrightarrow d}$. By using (31) and (32), equation (29) can be reduced to

$$z_d^{i\leftrightarrow d} = A_{21}^* \left(A_{11}^*\right)^{-1} z_{i\leftrightarrow d}^{i\leftrightarrow d} + \left[J_{14}^{21} + A_{21}^* \left(A_{11}^*\right)^{-1} J_{14}^{11}\right] z_i^{i\leftrightarrow d} \tag{33}$$

by integrating the five line of (18) and substituting into (33), and using (25) and (26), we have

$$\begin{aligned} x_d^{i\leftrightarrow d} &= \left(I - H_1 J_{31}^{12}\right)^{-1} \left[\left(H_2 + H_1 J_{31}^{11}\right) x_{i\leftrightarrow d}^{i\leftrightarrow d}\right. \\ &\quad \left. + H_1 J_{33}^{11} \int_0^t u(\tau)\, d\tau\right] \end{aligned} \tag{34}$$

where $H_1 = \left(F_d^{i\leftrightarrow d}\right)^{-1} \left[J_{14}^{21} - A_{21}^* \left(A_{11}^*\right)^{-1} J_{14}^{11}\right] F_i^{i\leftrightarrow d}$ and $H_2 = \left(F_d^{i\leftrightarrow d}\right)^{-1} A_{21}^* \left(A_{11}^*\right)^{-1} F_{i\leftrightarrow d}^{i\leftrightarrow d}$. Using the five line of (18) and (34),

$$\begin{aligned} x_i^{i\leftrightarrow d} &= \left[J_{41}^{11} + J_{31}^{12} H_3 H_4\right] x_{i\leftrightarrow d}^{i\leftrightarrow d} + \\ &\quad \left[I + J_{31}^{12} H_3 H_1\right] J_{33}^{11} \int_0^t u(\tau)\, d\tau \end{aligned} \tag{35}$$

where $H_3 = \left(I - H_1 J_{31}^{12}\right)^{-1}$and $H_4 = H_2 + H_1 J_{31}^{11}$. If we find the derivative of (34)

$$\dot{x}_d^{i\leftrightarrow d} = H_3 \left[H_4 \dot{x}_{i\leftrightarrow d}^{i\leftrightarrow d} + H_1 J_{33}^{11} u\right] \tag{36}$$

by substituting (36) into (27) then

$$z_{i\leftrightarrow d}^{i\leftrightarrow d} = \left[A_{11}^* + A_{12}^* H_3 H_4\right] \dot{x}_{i\leftrightarrow d}^{i\leftrightarrow d} + A_{12}^* H_3 H_1 J_{33}^{11} u + J_{14}^{11} z_i^{i\leftrightarrow d} \tag{37}$$

from (26), (35) and (37) we have,

$$\begin{aligned} z_{i\leftrightarrow d}^{i\leftrightarrow d} &= A_r^* \dot{x}_{i\leftrightarrow d}^{i\leftrightarrow d} + \left[A_{12}^* H_3 H_1 J_{33}^{11} + B_1^*\right] u \\ &\quad + J_{14}^{11} F_i^{i\leftrightarrow d} \left[J_{31}^{11} + J_{31}^{12} H_3 H_4\right] x_{i\leftrightarrow d}^{i\leftrightarrow d} \\ &\quad + J_{14}^{11} F_i^{i\leftrightarrow d} \left[I + J_{31}^{11} H_3 H_1\right] J_{33}^{11} \int_0^t u(\tau)\, d\tau \end{aligned} \tag{38}$$

where $A_r^* = A_{11}^* + A_{12}^* H_3 H_4$. From (24) and (38) with (21), (22) and (23), we prove (19) ■

.

In order to obtain the steady state of the state variables in integral causality on the BGI and derivative causality on the BGD, $\left(x_{i\leftrightarrow d}^{i\leftrightarrow d}\right)_{ss}$, from (19) and the Final Valuje Theorem then,

$$\left(x_{i\leftrightarrow d}^{i\leftrightarrow d}\right)_{ss} = \left(E_r^* F_{i\leftrightarrow d}^{i\leftrightarrow d}\right)^{-1} B_r^* u_{ss} + \lim_{s\to 0}\left(E_r^* F_{i\leftrightarrow d}^{i\leftrightarrow d} - A_r^* s\right)^{-1} \frac{Q_r^*}{s} u_s \tag{39}$$

where $\left(x_{i\leftrightarrow d}^{i\leftrightarrow d}\right)_{ss}$ and u_{ss} are the steady state of the $x_{i\leftrightarrow d}^{i\leftrightarrow d}$ variables and inputs u, respectively.

In the next section the proposed methodlogy to a passive suspension is applied.

IV. Passive Suspension

A passive vibration control unit consists of a resilient member (stiffness) and an energy dissipator (damper) to either absorb vibratory energy or load the transmission path of the disturbing vibration.

Passive suspensions have been presented. The half car suspension model is usually represented as a four degree or freedom system, which has heave, pitch and motion of the front and rear wheels. Fig. 3 shows the bond graph suspension representation. Dynamics is assumed solely on the vertical axis and suspensions actions are denoted F_z. Spring/damper suspension component phenomena correspond to C-type energy storage and energy dissipation; a pair of C and R elements thus represents these phenomena.

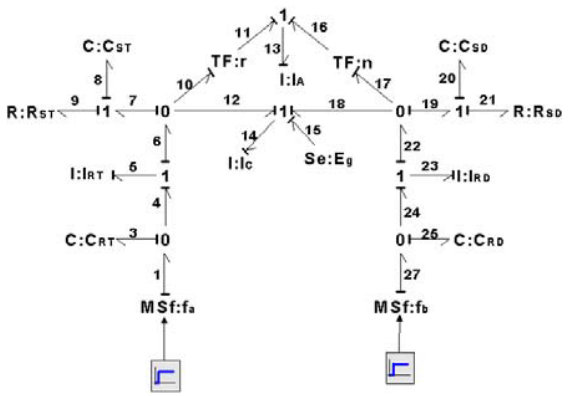

Fig. 3. Bond graph in integral causality of the passive suspension.

The corresponding bond graph in derivative causality assignment of the passive suspension is shown in Fig. 4.

The key vectors of the bond graph in derivative causality and the constitutive relations are,

$$\begin{aligned}
x_d^d &= \begin{bmatrix} q_3 & p_5 & q_8 & p_{13} & p_{14} & q_{20} & p_{23} & q_{25} \end{bmatrix}^T \\
\dot{x}_d^d &= \begin{bmatrix} f_3 & e_5 & f_8 & e_{13} & e_{14} & f_{20} & e_{23} & f_{25} \end{bmatrix}^T \\
z_d^d &= \begin{bmatrix} e_3 & f_5 & e_8 & f_{13} & f_{14} & e_{20} & f_{23} & e_{25} \end{bmatrix}^T \\
u &= \begin{bmatrix} f_1 \\ e_{15} \\ f_{27} \end{bmatrix}; D_{in}^d = \begin{bmatrix} f_9 \\ f_{21} \end{bmatrix}; D_{out}^d = \begin{bmatrix} e_9 \\ e_{21} \end{bmatrix}
\end{aligned}$$

$$F_d = diag\left\{\frac{1}{C_{RT}}, \frac{1}{I_{RT}}, \frac{1}{C_{ST}}, \frac{1}{I_A}, \frac{1}{I_C}, \frac{1}{C_{SD}}, \frac{1}{I_{RD}}, \frac{1}{C_{RD}}\right\}$$

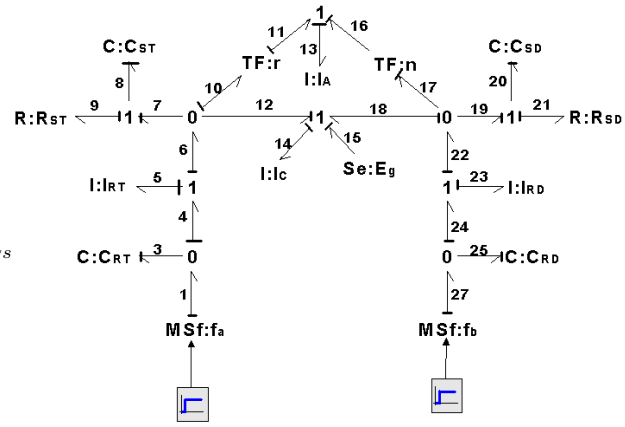

Fig. 4. Bond graph in derivative causality of the passive suspension.

$$L^d = diag\left\{R_{ST}, R_{SD}\right\}$$

and the junction structure is

$$J_{11} = \begin{bmatrix}
0 & 1 & 0 & \frac{r}{1-nr} & \frac{-nr}{1-nr} & 0 & 0 & 0 \\
-1 & 0 & 0 & 0 & 0 & 0 & 0 & 0 \\
0 & 0 & 0 & \frac{r}{1-nr} & \frac{-nr}{1-nr} & 0 & 0 & 0 \\
\frac{-n}{nr-1} & 0 & \frac{-n}{nr-1} & 0 & 0 & \frac{n}{nr-1} & 0 & \frac{n}{nr-1} \\
\frac{1}{nr-1} & 0 & \frac{1}{nr-1} & 0 & 0 & \frac{-nr}{nr-1} & 0 & \frac{-nr}{nr-1} \\
0 & 0 & 0 & \frac{r}{nr-1} & \frac{1}{nr-1} & 0 & 0 & 0 \\
0 & 0 & 0 & 0 & 0 & 0 & 0 & -1 \\
0 & 0 & 0 & \frac{n}{nr-1} & \frac{-nr}{nr-1} & 0 & 1 & 0
\end{bmatrix}$$

$$J_{21} = \begin{bmatrix} 0 & 0 & 1 & 0 & 0 & 0 & 0 & 0 \\ 0 & 0 & 0 & 0 & 0 & 1 & 0 & 0 \end{bmatrix}; J_{22} = J_{23} = 0$$

$$J_{13} = \begin{bmatrix}
0 & 1 & 0 & \frac{n}{nr-1} & \frac{-1}{nr-1} & 0 & 0 & 0 \\
\frac{nr}{1-nr} & 0 & \frac{nr}{1-nr} & 0 & 0 & \frac{-1}{1-nr} & 0 & \frac{nr}{1-nr} \\
0 & 0 & 0 & \frac{-n}{nr-1} & \frac{nr}{nr-1} & 0 & 1 & 0
\end{bmatrix}^T$$

The steady state is,

$$\left(z_d^d\right)_{ss} = J_{13} u_{ss} \tag{40}$$

In order to verify the steady state behavior, simulation results using the following parameters: $C_{ST} = C_{SD} = 5.9481 \times 10^{-5}$; $R_{ST} = R_{SD} = 1000$; $I_{RT} = I_{RD} = 0.01666$; $I_A = 0.001$; $C_{RT} = C_{RD} = 5.2631 \times 10^{-6}$; $I_c = 0.001739$, $r = 1$, $n = -1$, $e_{15} = -9.81$, $f_1 = 0.1$ and $f_{27} = 0.5$ is shown in Fig. 5.

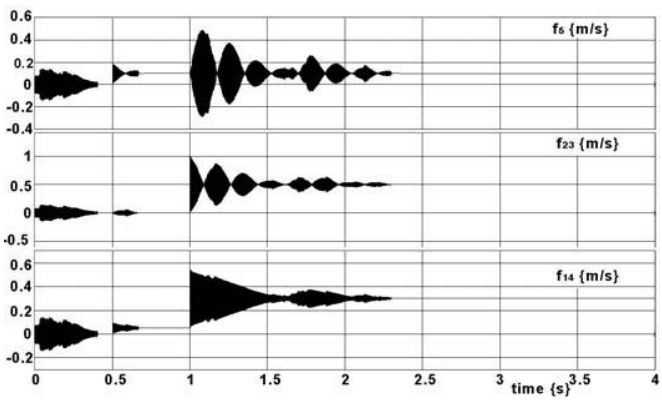

Fig. 5. Simulation results of a passive suspension.

By using the numerical parameters and (40), the steady state for $(f_5)_{ss}$, $(f_{23})_{ss}$ and $(f_{14})_{ss}$ is givey by,

$$\begin{aligned}(f_5)_{ss} &= (f_1)_{ss}\,;(f_{23})_{ss}=(f_{27})_{ss}\\ (f_{14})_{ss} &= \frac{-(f_1)_{ss}}{nr-1}+\frac{nr\,(f_{27})_{ss}}{nr-1}\\ (f_5)_{ss} &= 0.1;(f_{23})_{ss}=0.5;(f_{14})_{ss}=0.3\end{aligned}$$

In the next section, a half car active suspension is used to obtain the steady state response of the system.

V. Active Suspension

The passive suspension has significant limitations in structural applications where broadband disturbances of highly uncertain nature are encountered. In order to compensate for these limitations, active vibration control systems are utilized. Fig. 6 shows the active suspension used a half car.

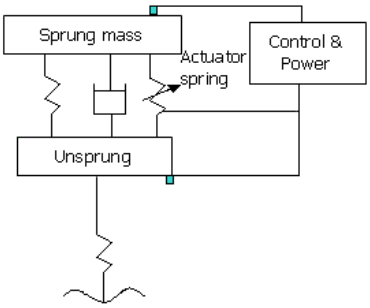

Fig. 6. Active suspension.

A bond graph with a integral causality assignment of an half car active suspension is shown in Fig. 7. This model is interesting because of some storage elements have integral causality and others have derivative causality.

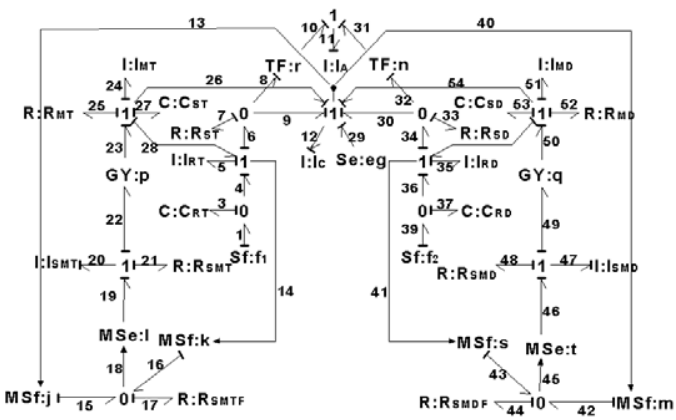

Fig. 7. BGI of an active suspension.

The bond graph in derivative causality of the active suspension is shown in Fig. 8. This bond graph model has general properties from the point of view of the causality. Hence, BGD contains storage elements in integral and derivative causality. Thus, in order to get the structure junction of the BGD, Lemma 2 is be applied.

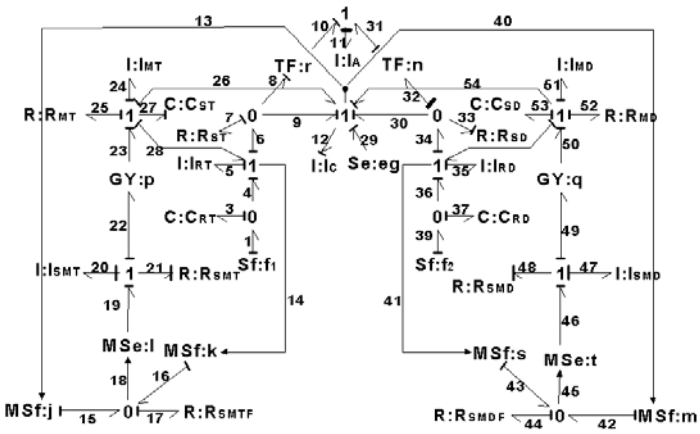

Fig. 8. BGD of an active suspension.

The key vectors of the BGD are,

$$\begin{aligned}
x_{i\leftrightarrow d}^{i\leftrightarrow d} &= \begin{bmatrix} p_{11}\\ p_{12}\\ p_{20}\\ q_{27}\\ p_{47}\end{bmatrix};\dot{x}_{i\leftrightarrow d}^{i\leftrightarrow d}=\begin{bmatrix} e_{11}\\ e_{12}\\ e_{20}\\ f_{27}\\ e_{47}\end{bmatrix};z_{i\leftrightarrow d}^{i\leftrightarrow d}=\begin{bmatrix} f_{11}\\ f_{12}\\ f_{20}\\ e_{27}\\ f_{47}\end{bmatrix}\\
D_{in}^{d} &= \begin{bmatrix} f_7 & f_{17} & e_{21} & f_{25} & e_{33} & f_{44} & e_{48} & f_{52}\end{bmatrix}^T\\
D_{out}^{d} &= \begin{bmatrix} e_7 & e_{17} & f_{21} & e_{25} & f_{33} & e_{44} & f_{48} & e_{52}\end{bmatrix}^T\\
x_{d}^{i\leftrightarrow d} &= \begin{bmatrix} p_5\\ p_{24}\\ p_{35}\\ q_{53}\end{bmatrix};\dot{x}_{d}^{i\leftrightarrow d}=\begin{bmatrix} e_5\\ e_{24}\\ e_{35}\\ f_{53}\end{bmatrix};z_{d}^{i\leftrightarrow d}=\begin{bmatrix} f_5\\ f_{24}\\ f_{35}\\ e_{53}\end{bmatrix}\\
x_{i}^{i\leftrightarrow d} &= \begin{bmatrix} q_3 & q_{37} & q_{53}\end{bmatrix}^T;\dot{x}_{i}^{i\leftrightarrow d}=\begin{bmatrix} f_3 & f_{37} & f_{53}\end{bmatrix}^T\\
z_{i}^{i\leftrightarrow d} &= \begin{bmatrix} e_3 & e_{37} & e_{53}\end{bmatrix}^T;u=\begin{bmatrix} f_1 & e_{29} & f_{39}\end{bmatrix}^T
\end{aligned}$$

the constitutive relations are,

$$F_{i\leftrightarrow d}^{i\leftrightarrow d} = diag\left\{\frac{1}{I_A},\frac{1}{I_C},\frac{1}{I_{SMT}},\frac{1}{C_{ST}},\frac{1}{I_{SMD}}\right\} \quad (41)$$

$$F_{i}^{i\leftrightarrow d} = diag\left\{\frac{1}{C_{RT}},\frac{1}{C_{RD}},\frac{1}{C_{SD}}\right\} \quad (42)$$

$$F_{d}^{i\leftrightarrow d} = diag\left\{\frac{1}{I_{RT}},\frac{1}{I_{MT}},\frac{1}{I_{RD}},\frac{1}{I_{MD}}\right\} \quad (43)$$

$$L^{d} = diag\left\{R_{ST},R_{SMTF},\frac{1}{R_{SMT}},R_{MT},\frac{1}{R_{SD}},R_{SMDF},\frac{1}{R_{SMD}},R_{MD}\right\} \quad (44)$$

and the junction structure is,

$$\begin{aligned}
J_{11}^{11} &= \begin{bmatrix} 0_{3\times3} & h_1\\ -h_1^T & 0_{2\times2}\end{bmatrix};J_{11}^{12}=\begin{bmatrix} 0_{3\times4}\\ h_2\\ 0_{1\times4}\end{bmatrix}\\
J_{11}^{21} &= -\left(J_{11}^{12}\right)^T;J_{11}^{22}=J_{12}^{21}=J_{21}^{12}=J_{13}^{21}=J_{14}^{21}=0\\
J_{23}^{11} &= J_{41}^{12}=0\\
J_{13}^{11} &= \begin{bmatrix} 0_{3\times3}\\ h_3\\ 0_{1\times3}\end{bmatrix};J_{14}^{11}=-\left(J_{41}^{11}\right)^T=\begin{bmatrix} 0_{3\times3}\\ h_4\\ 0_{1\times3}\end{bmatrix}
\end{aligned}$$

$$J_{13}^{11} = \begin{bmatrix} 0_{3\times3} \\ h_3 \\ 0_{1\times3} \end{bmatrix}; J_{14}^{11} = -\left(J_{41}^{11}\right)^T = \begin{bmatrix} 0_{3\times3} \\ h_4 \\ 0_{1\times3} \end{bmatrix}$$

$$J_{12}^{11} = \begin{bmatrix} 0 & 0 & 0 & 0 & -n & 0 & 0 & 0 \\ 0 & 0 & 0 & 0 & 0 & 0 & 0 & 0 \\ 0 & 0 & 1 & 0 & 0 & 0 & 0 & 0 \\ 0 & 0 & p & -1 & 0 & 0 & q & -1 \\ 0 & 0 & 0 & 0 & 0 & 0 & 1 & 0 \end{bmatrix}$$

$$J_{21}^{11} = \begin{bmatrix} 0 & 0 & 0 & 0 & n & 0 & 0 & 0 \\ 0 & 0 & 0 & 0 & 0 & 0 & 0 & 0 \\ 0 & 0 & -1 & 0 & 0 & 0 & 0 & 0 \\ 0 & j+k & -p & 1 & 0 & m+s & -q & 1 \\ 0 & 0 & 0 & 0 & 0 & 0 & -1 & 0 \end{bmatrix}^T$$

$$J_{21} = \begin{bmatrix} 0_{2\times2} & h_5 & 0_{2\times2} \\ h_6 & 0_{4\times4} & 0_{4\times3} \\ 0_{2\times2} & h_7 & 0_{2\times2} \end{bmatrix}$$

where

$$h_1 = \begin{bmatrix} 0 & 0 \\ 1 & 0 \\ 0 & 0 \end{bmatrix}; h_2 = \begin{bmatrix} -1 \\ -1 \\ -1 \\ -1 \end{bmatrix}^T$$

$$h_3 = \begin{bmatrix} 0 & 1 & 0 \end{bmatrix}; h_4 = \begin{bmatrix} 1 & 1 & -1 \end{bmatrix}$$

$$h_6 = \begin{bmatrix} 0 & l \\ 0 & 0 \\ -\frac{n}{r} & 0 \\ 0 & 0 \end{bmatrix} \quad h_5 = \begin{bmatrix} 0 & 0 & \frac{n}{r} & 0 \\ 0 & 0 & 0 & 0 \end{bmatrix} \quad h_7 = \begin{bmatrix} 0 & 0 & 0 & t \\ 0 & 0 & 0 & 0 \end{bmatrix}$$

The steady state is defined by,

$$B_r^* = \begin{bmatrix} 0 & 0 & 0 \\ 0 & 0 & 0 \\ 0 & 0 & 0 \\ 0 & 1 & 0 \\ 0 & 0 & 0 \end{bmatrix}; Q_r^* = \begin{bmatrix} 0 & 0 & 0 \\ 0 & 0 & 0 \\ 0 & 0 & 0 \\ \frac{1}{C_1} & 0 & \frac{1}{C_2} \\ 0 & 0 & 0 \end{bmatrix}$$

$$E_r^* = \begin{bmatrix} I_5 & 0 & 0 & 0 & 0 \\ 0 & I_6 & 0 & 0 & 0 \\ 0 & 0 & I_7 & 0 & 0 \\ 0 & 0 & 0 & I_8\left(\frac{1}{C_1}+\frac{1}{C_2}+\frac{1}{C_3}+1\right) & 0 \\ 0 & 0 & 0 & 0 & I_9 \end{bmatrix}$$

The numerical parameters are: $C_{RD} = C_{RT} = 5.2631 \times 10^{-6}; C_{SD} = C_{ST} = 5.9481 \times 10^{-5}$; $I_{RT} = I_{RD} = 0.01666$; $j = l = k = p = s = m = t = 1$; $R_{SMTF} = R_{SMT} = 1$; $I_{MT} = I_{SMT} = I_{MD} = I_{SMD} = 1$; $I_c = 1.739 \times 10^{-3}$; $f_1 = f_{29} = e_{29} = 1$ and substituting (39) we have,

$$\begin{aligned} (p_{11})_{ss} &= 0; (p_{12})_{ss} = 0.0015; \ (p_{20})_{ss} = 0.91 \quad (45) \\ (q_{27})_{ss} &= \infty; \ (p_{47})_{ss} = 0.91 \end{aligned}$$

Finally, the simulation results of the half car active suspension is shown in Fig. 9. Note that, the steady state of the linearly independent state variables, $x_{i\leftrightarrow d}^{i\leftrightarrow d}$, is verified from (45).

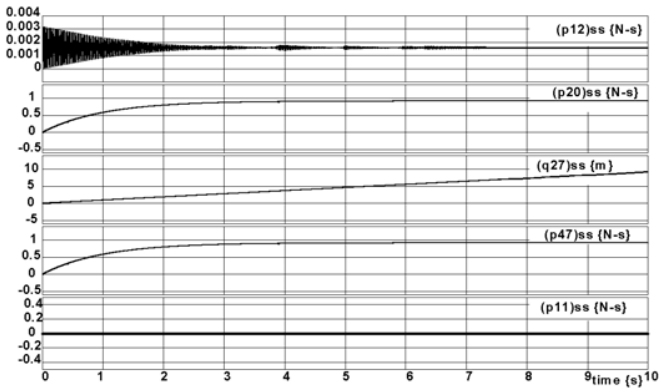

Fig. 9. Simulations results of an active suspension.

VI. Conclusions

The steady state response of passive and active suspensions in a bond graph approach is proposed. This approach proposes to obtain the steady state using a bond graph with preferred derivative causality assignment. The main advantage to have the BGD of the system is to invert the state matrix A of the system. The proposed junction structure of the BGD with storage elements in derivative and integral causality indicates that the state matrix is singular.

References

[1] Dean C. Karnopp, Donald L. Margolis and Ronald C. Rosenberg, *System Dynamics Modeling and Simulation of Mechatronic Systems*, Wiley, John & Sons, 2000.

[2] P. E. Wellstead, *Physical System Modelling*, Academic Press, London, 1979.

[3] C. Sueur and G. Dauphin-Tanguy, "Bond graph approach for structural analysis of MIMO linear systems", *Journal of the Franklin Institute*, Vol. 328, No. 1, pp. 55-70, 1991.

[4] Shinq-Jen Wu, H. H. Chiang, J. H. Chen and T. T. Lee, Optimal Fuzzy Control Design for Half-Car Active Suspension Systems, Proceedings of the 2004 IEEE International Conference on Networking, Sensing & Control, Taipei, pp. 583-588, 2004.

[5] Nader Jalili, A Comparative Study and Analysis of Semi-Active Vibration-Control Systems, Journal of Vibration and Acoustics, ASME, vol. 124, October 2002, pp. 593-605, 2002.

[6] James Lacombe, Tire model for simulations of vehicle motion on high and low friction road surfaces, Proceedings of the 2000 winter simulation, pp. 1025-1034.

[7] W. Drozdz and H. B. Pacejka, Development and validation of a bond graph handling model of an automobile, Journal of the Franklin Institute, vol. 328, no. 5/6, pp. 941-957, 1991.

[8] D. Hrovat and W. E. Tobler, Bond graph modeling of Automotive Power Trains, Journal of the Franklin Institute, vol. 328, no. 5/6, pp. 623-662, 1991.

[9] N. Banerjee, A. K. Saha, R. Karmakar and R. Bhattacharyya, bond graph modeling of a railway truck on curved track, Simulation Modelling Practice and Theory 17(2009) 22-34.

[10] W. Marquis-Favre, E. Bideaux, O. Mechin, S. Scavarda, F. Guillemard and M. Ebalard, Mechatronic bond graph modelling of an automotive vehicle, Mathematical and Computer Modelling of Dynamical Systems, vol. 12, no. 2-3, April-June 2006, 189-202.

[11] Peter C. Breedveld, A Bond Graph Algorithm to Determine the Equilibrium State of a State System, *Journal of the Franklin Institute,* Vol. 318, pp. 71-75, 1984.

[12] Gilberto Gonzalez-A., R. Galindo, *Steady-State Values for a Physical with Bond Graph Approach*, 9th IEEE Inter. Conf. on Methods and Models in Automation and Robotics, Miedzyzdroje, Poland pp.1317-1322, 2003.