World Academy of Science, Engineering and Technology
International Journal of Mechanical and Mechatronics Engineering
Vol:4, No:10, 2010

A New Controlling Parameter in Design of Above Knee Prosthesis

M. Tahani and G. Karimi

Open Science Index, Mechanical and Mechatronics Engineering Vol:4, No:10, 2010 publications.waset.org/11886.pdf

***Abstract*—**In this paper after reviewing some previous studies, in order to optimize the above knee prosthesis, beside the inertial properties a new controlling parameter is informed. This controlling parameter makes the prosthesis able to act as a multi behavior system when the amputee is opposing to different environments. This active prosthesis with the new controlling parameter can simplify the control of prosthesis and reduce the rate of energy consumption in comparison to recently presented similar prosthesis "Agonist-antagonist active knee prosthesis".

In this paper three models are generated, a passive, an active, and an optimized active prosthesis. Second order Taylor series is the numerical method in solution of the models equations and the optimization procedure is genetic algorithm.

Modeling the prosthesis which comprises this new controlling parameter (SEP) during the swing phase represents acceptable results in comparison to natural behavior of shank. Reported results in this paper represent 3.3 degrees as the maximum deviation of models shank angle from the natural pattern. The natural gait pattern belongs to walking at the speed of 81 m/min.

***Keywords*—**Above knee prosthesis, active controlling parameter, ballistic motion, swing phase.

I. Introduction

SIMPLE wooden canes must be nearly as old as human kind itself. Wooden peg legs have been effective aids to walking for thousands of years. Until the 20th century, wood and leather were the favorite composite materials in O&P devices. Wars and conflicts have inevitably stimulated developments in O&P technology such as WWI and WWII [1], [2].

How the swing trajectory during human walking is planed? According to Becket and Chang, a study for this problem was found in 1830s and a hypothesis that is called as a pendulum hypothesis or a ballistic model was proposed [3]. Ballistic motion is any movement of a body entirely under the action of gravity. Modeling the ballistic motion assumption of human swing leg during normal walking was proposed by Mochon and McMahon [4] and since that has been improved by others. In this modeling the swing leg was assumed as a pendulum. These improvements have resulted in variety of applications such as optimization of lower limb prosthesis, but in this way, the main not-responded question is to what extent ballistic walking models can be used to quantitatively predict the swing phase characteristics [5]?

M. Tahani is associate professor at Ferdowsi university of Mashhad (phone: +98-511-8763304; e-mail: mtahani@ferdowsi.um.ac.ir).

G. Karimi is graduate student at Azad University, Mashhad Branch. (e-mail: Gh_karimi@hotmail.com).

Optimization of ballistic motion in swing phase of human walking can be done through the inertial properties and joints mechanical specifications of swing parts. Selles *et al.* [6] reviewed the different theoretical models and studies on the effect of prosthetic mass and mass distribution on kinematics and energetics of prosthetic gait. Although the review of the literature did not provide any uniform results but it suggests that further reduction of inertial loading of the present lightweight prosthesis should not be the main goal of prosthetic design. The results of the empirical researches also suggest that, within the range of masses studied, kinematics and energetics of prosthetic gait do not change.

The ballistic motion assumption has been discussed not only in biomechanics but also in robotics.

Passive dynamic walking machines that walk on shallow slopes were first designed, simulated and built by Tad McGeer [1], [2]. These machines consist of hinged rigid bodies that make collisional and rolling contact with a slope, rigid ground surface. They are powered by gravity and have no active control [7].

McGeer's results in passive dynamic walking machines suggest that the mechanical parameters of the human body (e.g. lengths and mass distributions) have a greater effect on the existence and quality of gait than is generally recognized. That is, one needs to study mechanics, not just activation and control, to fully understand walking [8].

In order to improve the previous designs, active actuators were devised to removes the dependency on gravity and allows the robot to walk on the flat [9].

One main advantage of passive dynamic bipeds is their simplicity which makes them easier to understand, build and modify [10]. The most useful lessons which can be learnt in passive dynamic projects is becoming aware of two opposite aspects of the locomotion system of human body, simplicity and complexity, in which by considering the passive dynamic considerations in the design the simplicity can be maintained and by applying modern active systems the complexity can be overcome.

Despite of several researches on passive movement of human walking during swing phase, there are publications which note that walking at normal walking speed is not completely passive [5], or the swing phase of human walking is not a passive movement [11].

Either assume or not assume the swing phase motion as a passive one, the importance of multi behavior function of an above knee prosthesis is obvious, as the published results by Zahedi [12] represents that changing walking speed happens considerable times during a day, than other behaviors like stop and standing or ascending or descending ramps or stairs.

Open Science Index, Mechanical and Mechatronics Engineering Vol:4, No:10, 2010 publications.waset.org/11886.pdf

So some controlling parameters are needed to change the function of prosthesis. In this way Zarrugh *et al.* [13] simulated the swing phase dynamics of an amputee wearing an above knee prosthesis using a simple controlling unit. Tsai *et al.* [14] compared hydraulic and mechanical knee swing phase simulation and design of above knee prostheses. Blumentritt [15] studied a rotary hydraulic prosthetic knee mechanism for a transfemural amputee. Kim and Oh [16] developed an above knee prosthesis using magnetorheological damper. A comparison between a magnetorheological controlling prosthetic knee and a conventional model was done by Herr and Wilkenfeld [17]. Kapti and Yucenur [18] also worked on design and control of an active artificial knee joint. A biomimetic variable-impedance knee prosthesis was proposed by Martinez and Herr [19] in order to improve gait and metabolic energy consumption of above-knee amputees on variant terrain conditions. Joshi and Anand [20] discussed about actuators like electrorheological and magnetorheological fluids. Martinez and Herr [21] continued their design in their variable-impedance knee prosthesis so called the agonist-antagonist active knee. That prosthesis comprises an active powered knee with two series-elastic actuators positioned in parallel in an agonist-antagonist arrangement which are optimized to minimize the electrical energy cost of level-ground walking. These optimizations in controlling parameters were also coincident with the knee joint mechanism improvements.

As it was mentioned, there are different types of controlling parameters in prosthetic knee joint designs such as coulomb friction, elastic, hydraulic (simple and smart) and, the agonist-antagonist actuation (active variable impedance).

The combination of biomechanics and robotics results in the electronically controlled knee joint during swing and stance phase. The basic principle of this system is the detection of the current state of gait of the amputee by integrated sensors and the immediate adaptation of the flexion and extension resistances of the prosthetic knee [12].

In this paper it is tried to define a new controlling parameter. A simple dynamic modeling on prosthesis swing phase motion and optimization of inertial properties of the prosthesis is also developed to verify the effect of this new controlling parameter.

II. The New Controlling Parameter in Above Knee Prosthesis Design

A. The SEP Controlling Parameter

In swing phase modeling of human walking in an above knee prosthetic leg, as it is represented in Fig. 1, the shank angular position pattern varies according to different knee torsion spring end position (SEP). This parameter, SEP, adjusts the jam/elongation of spring which adjusts the initial acceleration in the prosthesis knee. This idea leads us to optimize a variation pattern for this parameter in order to obtain a normal swing motion for the prosthesis. Fig. 1 represents the SEP controlling parameter.

The SEP, acts as a variable-impedance controlling parameter which has no limitations in adoption to polycentric knee mechanisms or large flexion angles in comparison to other variable-impedance ones. The most important advantage of the variable impedance controlling parameter is its ability to adopt the motion on variant terrain conditions.

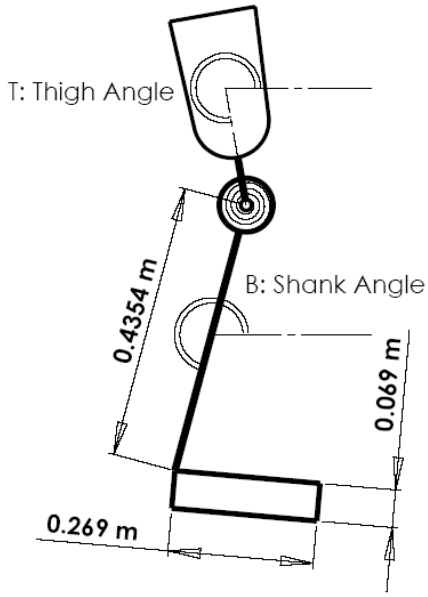

Fig. 1 Above knee prosthetic leg with SEP controlling parameter

B. Swing Phase Modeling of SEP Controlling Above Knee Prosthetic Leg

The dynamic modeling of an above knee prosthesis is according to Lagrange dynamic equation method which is based on variation of kinetic and potential energy of the system. This system assumes to act as a 2D open kinematical chain in sagittal plane. Appendix 1 is the nomenclature of the modeling parameters and Appendix 2 explains deriving the dynamic equation of the above knee prosthetic leg with the SEP controlling parameter.

C. Anthropometry

In prosthetic limb design, there have to be an exact similarity in physical dimensions and geometry between the prosthesis and the amputed limb so the amputee's lost limb dimensions have to be obtained from anthropometric data references in order to apply in design such devices [22]. In this paper, the segmental dimensions are gathered from the study of Yeadon and Morlock [23] which is in adoption to the Winter [22] anthropometric data. Fig. 2 represents a 177 cm height human above knee prosthesis with limbs anthropometric dimensions.

D. Numerical Solution

Second order Taylor series is a numerical method in solution of such equations. The period of swing motion is divided into 42 points (instants). The motion conditions exerted to the support of the model on these points are the

Open Science Index, Mechanical and Mechatronics Engineering Vol:4, No:10, 2010 publications.waset.org/11886.pdf

accelerations in horizontal and vertical directions which are known from a simulation. This simulation is based on anthropometric and natural walking gait analysis data [24].

$$h = \frac{t_{final} - t_{initial}}{n} = 0.0112 \text{ (The step period)} \quad (1)$$

$$\ddot{B}_i = \text{The dynamic Equation} \quad (2)$$

$$\dot{B}_{i+1} = \dot{B}_i + h\ddot{B}_i \quad (3)$$

$$B_{i+1} = B_i + h\dot{B}_i + \frac{h^2}{2}\ddot{B}_i \quad (4)$$

Equations (1), (2), (3), and (4) represent the principle of the cyclic numerical solution process.

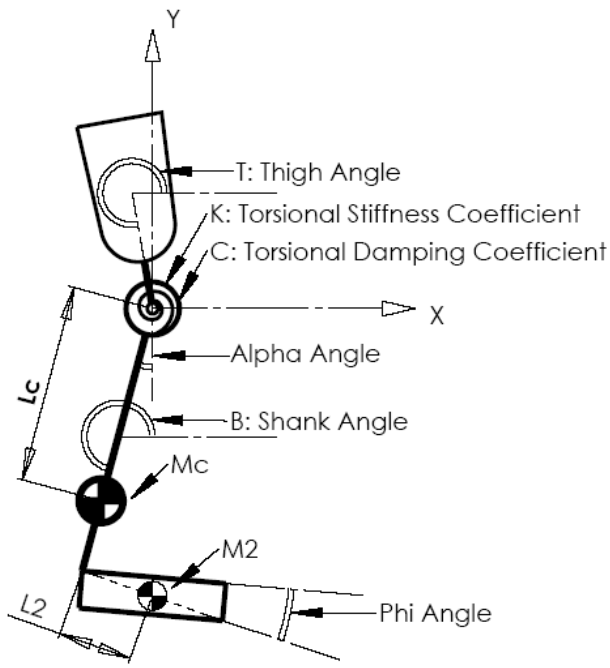

Fig. 2 Above knee prosthesis with estimated limbs dimensions according to anthropometry

III. Optimization

The optimization of prosthesis can be performed according to different approaches, generally, minimizing energy expenditure, and minimizing the kinematical deviation from a standard pattern [3].

In this paper minimizing the amount of deviation from natural pattern is the optimization approach. But as one objective in the development of lower limb prosthetics is to reduce prosthetic weight and moment of inertia [6], there are some penalty coefficients which prevent from increasing the amount of these inertial properties.

The optimizing parameters are stiffness and damping coefficient of knee joint and inertial properties of the shank link.

The optimization procedure applied to this problem is genetic algorithm.

A. Natural Gait

The mentioned standard pattern in optimization of prosthesis is the gait analysis data. Gait analysis data consists of the kinematic, kinetic, and energy consumption for a standard anthropometric consideration.

The gait analysis data that is used as natural pattern are gathered from [24] in which the data have been obtained from five healthy adult males with the average age of 26 ± 3 years. The subject's mass average was 70.1 ± 7.8 kilograms and the average of their height was 177 ± 3 centimeters. The subjects walked at an average speed of 81 m/min, which is very close to the optimal speed.

Our simulation of swing phase for an amputee which is not mentioned in this paper had similar considerations to the modeling of that study. This was why the reference data have obtained from that study.

B. Swing Phase Considerations

As the final conditions of the swing phase is the initial condition of double limb support and stance phase in gait of human walking, many tries have been made to improve the swing phase modeling. According to the walking concept, the important approach in stance phase is the system strength and components elasticity and in swing phase it is the transition and dynamics.

The following requirements for prosthetic knee function can be considered during swing phase of level walking.

Swing phase starts with the knee already flexed 30 degrees; the maximum knee angle is 55 to 65 degrees and time for achieving this range of knee motion is very short. The prosthetic knee should start with minimal flexion resistance and adapt automatically to a wide range of gait speeds. At mid-swing the shank changes the direction of rotation due to mass reaction forces and the knee starts to extend. Terminal swing phase starts when the shank is in vertical position and ends when the extended leg hits the ground again [12]. Fig. 3 pointed to these events during a swing phase scheme [25].

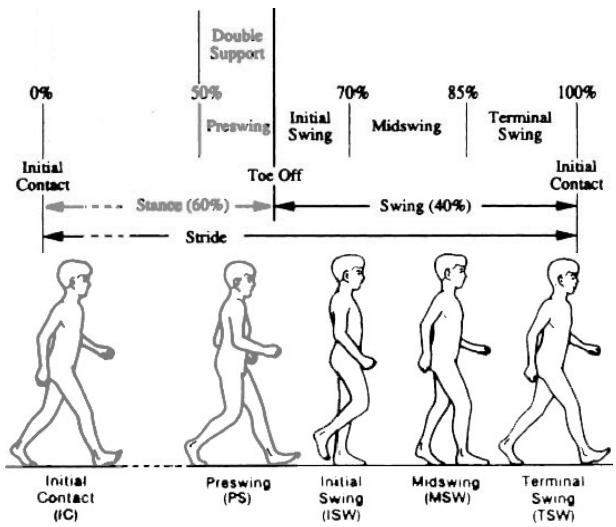

Fig. 3 Sequential representation of swing phase in a stride

Open Science Index, Mechanical and Mechatronics Engineering Vol:4, No:10, 2010 publications.waset.org/11886.pdf

C. Genetic Algorithm

The shank orientation, B, is planned to be optimized by means of genetic algorithm. Genetic algorithms are very useful in some optimization problems, in which the function cannot be written in terms of mathematical expression and are difficult or impossible to differentiate. These kinds of expressions are not able to be easily solved by analytic optimization.

Genetic algorithms are stochastic iterative processes that are not guaranteed to converge; the termination condition may be specified as some fixed maximal number of generations or as the attainment of an acceptable fitness level [26], [27]. Fig. 4 represents the genetic algorithm proceeding.

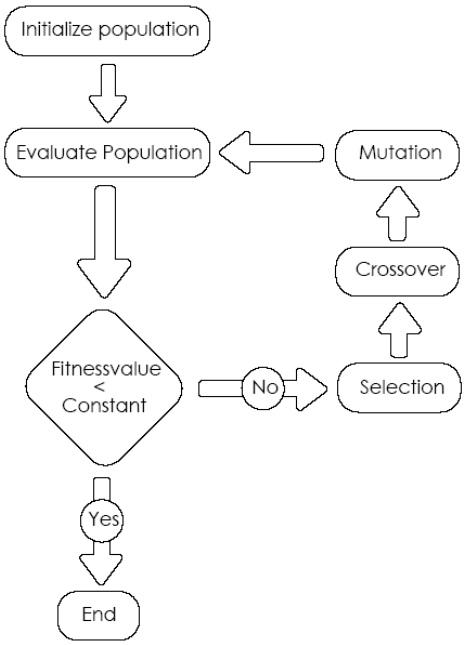

Fig. 4 The genetic algorithm procedure

In this algorithm the optimized parameters are the mass (m), center of mass position of the shank link (l), knee torsion stiffness (k), and damping coefficient (c) which are obtained by decoding each 48 character length chromosomes of a generation. The fitness function is based on the difference between the calculated angle of shank and the natural pattern. In this optimization the algorithm tries to minimize the amount of fitness value. The selection algorithm is the roulette wheel, which selects the individuals according to the inverse of the amount of fitness value and in crossover; each parent chromosome divides into four parts to compose an offspring.

The search space of parameters and penalty coefficients are defined according to fabrication and application considerations.

In our optimization algorithm both termination conditions; the attainment of an acceptable fitness level and a fixed maximal number of generations (about 6000) are defined to somehow unless the first one occurred the other one terminate the program.

When the controlling parameter is going to optimize the swing phase motion, first of all, the SEP variation pattern (α) is necessary to get obtained by a preliminary optimization. In this manner, the dynamic equation and the natural gait (data) of swing motion are applied to obtain a possible variation pattern for α which is optimized by minimization of the amount of α variation.

Application of α to the main optimization algorithm results in obtaining the informed (introduced) optimizing parameters (k, c, m, and l) and an angular position variation pattern for the shank link during the swing phase which is expected to be very similar to the natural pattern.

IV. Results and Discussion

A. Model1

Inertial optimization of the simplest modeled prosthesis with passive controlling (model1) is done firstly. The shank angle during the swing phase is depicted in Fig. 5 and the optimized parameters are represented in Table I. Although the maximum deviation (5.53 deg) from natural pattern is good enough but the system is still single behavior. This model is also sensitive to the estimated inertial properties.

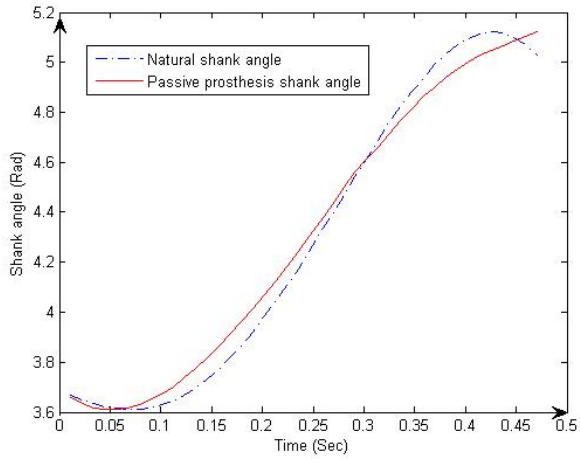

Fig. 5 Model 1 shank angle in comparison to the natural pattern during the swing phase

B. Model2

In order to improve the results, the SEP controlling parameter (α), is employed. In this model first of all, a variation pattern for α during the swing phase have to be composed in order to replace with the constant amount of a in conventional models.

Fig. 6 represents the optimized variation pattern for α which is obtained according to the mentioned preliminary optimization. Because of fabrication and control considerations the best line path among the ripples and variational amounts of the resulted α variations is estimated which it is called the trend line.

In order to fulfill the optimization on this model the obtained trend line for α variations assigned to the shank angle optimization which is performing according to the dynamic

Open Science Index, Mechanical and Mechatronics Engineering Vol:4, No:10, 2010 publications.waset.org/11886.pdf

equation and the shank angle natural pattern. The optimized variations of shank angle during swing phase are depicted in Fig. 7 and the optimized parameters are shown in Table I.

In model 2 the maximum deviation of shank angle from the natural pattern is 2.26 degrees.

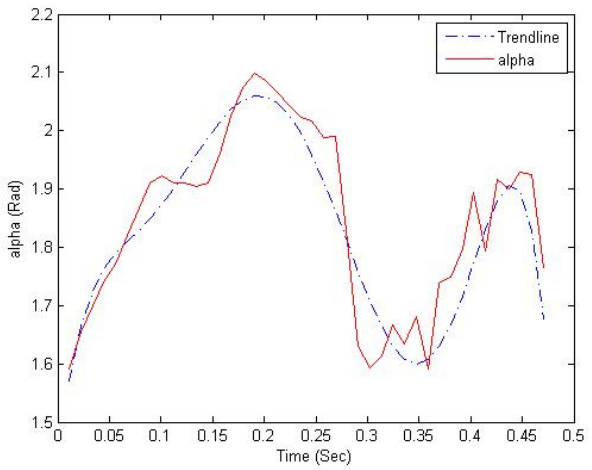

Fig. 6 The estimated α in preliminary optimization during the swing phase, and the best line path among the ripples and variational amounts of α which it is called trendline. (α), α

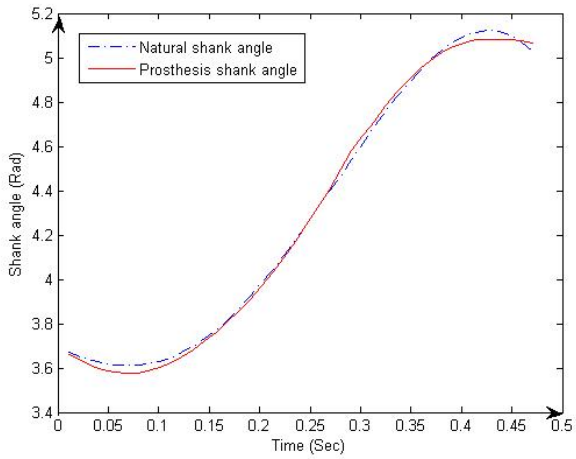

Fig. 7 Model 2 shank angle in comparison to the natural pattern during the swing phase

C. Model 3

As the composition of modeling and the SEP controlling parameter (α), are dependant to the torsion stiffness of knee, it cannot take 0 for the torsion stiffness coefficient, so in order to prevent from that, a penalty coefficient is defined.

Smaller mass for prosthesis is appreciated so another penalty coefficient defined to make the mass as small as possible and also another penalty coefficient is defined for shank center of mass position in order to prevent it from reaching (approaching) to the knee or ankle region. These considerations result in the optimized active prosthesis (model 3). Fig. 8 represents the effect of these penalty considerations on the shank angle variation during the swing phase. The effects of these penalties on optimizing parameters are also shown in Table I. Only the mass penalty coefficient is included in resulted fitness value. The mass penalty amount is 2.4 and the maximum deviation of shank angle to the natural pattern is 3.3 degrees.

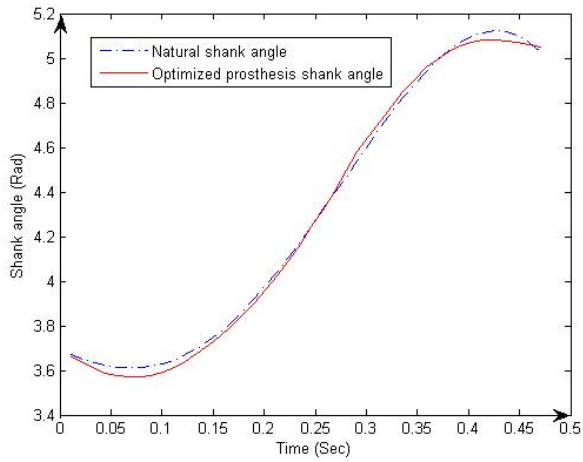

Fig. 8 Model 3 shank angle in comparison to the natural pattern during the swing phase

TABLE I
OPTIMIZED PARAMETERS OF MODELS 1, 2 AND 3

	Model1	Model2	Model3
k (N/rad)	13	3.1	2
c (Ns/rad)	20.8	5.6	2.4
m (kg)	8.143	6.271	3.306
l (m)	*0.455*	*0.387*	*0.339*
Fitness value (rad)	*0.0965*	*0.0394*	*0.1393*

Fitness value is the maximum amount of the model shank angle difference to the natural pattern.

The reported fitness value for model 3 is multiplied by the mass penalty coefficient. The penalty coefficient is equal to 2.4 and the estimated maximum deviation of the model shank angle to the natural one is equal to 0.058 Rad.

D. The Resulted Physical Parameters Verification

In order to check the feasibility of the model3 results a *MscVisualNastran* model composed. This model is constructed according to the assumed anthropometric data [22] and natural gait analysis results [24].

The results of optimized parameters assignments to this model are represented in Fig. 9. The resulted shank angle is depicted in comparison to model3 shank angle and the natural pattern during swing phase.

E. Saving Energy

Energy consumption is a key factor in evaluation of any design so it also tried to compare the magnitude of the energy consumed by this model to the energy consumption of a similar model during the swing phase.

In Fig. 10 variations of torsion load (torque) on the actuator of knee joint in relation to the α angle is depicted which its below area represents the amount of energy consumption during the phase. The average power the prosthesis consumes is 7.4 watt. This result belongs to model3 during swing phase of walking at the speed of 81 m/min.

Open Science Index, Mechanical and Mechatronics Engineering Vol:4, No:10, 2010 publications.waset.org/11886.pdf

The comparison of this result to similar diagram of the variable impedance agonist antagonist knee mechanism during swing phase is represented in Fig. 11 [21].

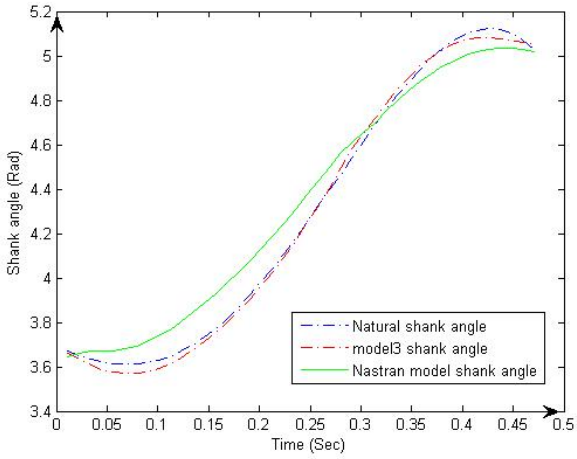

Fig. 9 The shank angle of the physical *Msc Visual Nastran* model obtained from model3 optimized parameters assignment, in comparison to the model3 and the natural shank angle during the swing phase

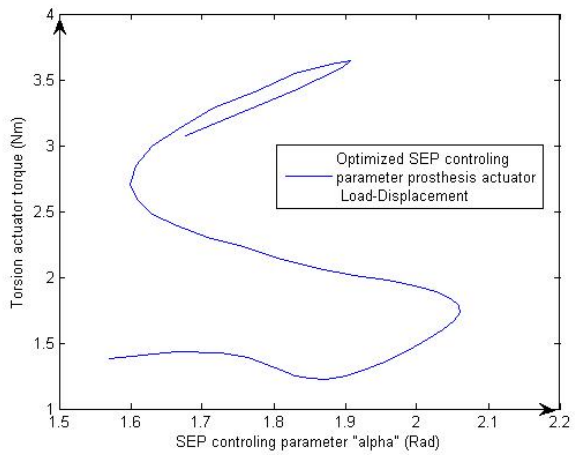

Fig. 10 The torque exerted by actuator during SEP rotation according to the α variation pattern.

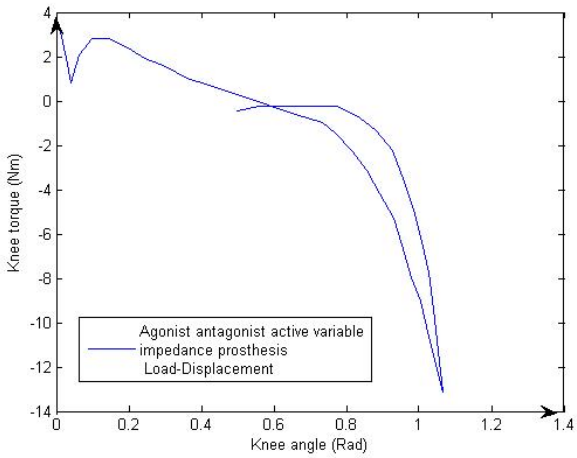

Fig. 11 The torque exerted by actuators during knee rotation

It is clear that the prosthesis which comprises the SEP controlling parameter bears less amount of torque at the knee joint actuator. As it is noted in [14] the performance of prosthesis with lighter weight design does not perform as well as heavier ones it observed that the fitness value of model3 which is heavier is more than the fitness value of model2 which approve that statement.

V. Conclusions

Optimization of prosthesis takes place through inertial properties and the controlling parameters. In this paper beside the inertial properties a new controlling parameter has been informed which make the prosthesis able to act as a multi behavior system when opposing different environments.

Modeling the prosthesis which comprises this controlling parameter (SEP) during the swing phase represents acceptable result in comparison to natural behavior of shank. The maximum deviation from the natural pattern in passive model (model1) is 5.53 degrees and in active model (model2) it is 2.26 degrees. In the optimized model (model3) inertial and fabrication considerations result in 3.3 degrees of maximum deviation from natural pattern.

In this paper it also seems possible to estimate the variation of controlling parameter (SEP) according to recommended inertial properties or knee mechanical characteristics.

The average power the prosthesis consumes is 7.4 watt. This result belongs to model3 during swing phase of walking at the speed of 81 m/min.

The next step in this project is the fabrication of the prosthesis in order to observe its operation and compare the modeling results to the experimental (empirical) ones.

Appendix I

Nomenclature

x_1 : shank center of mass transition horizontally
$\dot{x}_1$: shank center of mass velocity horizontally
y_1 : shank center of mass transition vertically
$\dot{y}_1$: shank center of mass velocity vertically
z_1 : shank center of mass transition laterally
$\dot{z}_1$: shank center of mass velocity laterally
x_2 : foot center of mass transition horizontally
$\dot{x}_2$: foot center of mass velocity horizontally
y_2 : foot center of mass transition vertically
$\dot{y}_2$: foot center of mass velocity vertically
z_2 : foot center of mass transition laterally
$\dot{z}_2$: foot center of mass velocity laterally
x_B : knee joint transition horizontally
$\dot{x}_B$: knee joint velocity horizontally
$\ddot{x}_B$: knee joint acceleration horizontally
y_B : knee joint transition vertically
$\dot{y}_B$: knee joint velocity vertically
$\ddot{y}_B$: knee joint acceleration vertically
z_B : knee joint transition laterally

Open Science Index, Mechanical and Mechatronics Engineering Vol:4, No:10, 2010 publications.waset.org/11886.pdf

B : shank orientation angle
$\dot{B}$: shank angular velocity
$\ddot{B}$: shank angular acceleration
φ : angle between the line of ankle to foot center of mass and the longitudinal direction of foot
A : angle between the line of ankle to foot center of mass and the orientation of shank = 1.319 rad
$\dot{A}$: ankle joint angular velocity
$\ddot{A}$: ankle joint angular velocity
G : foot orientation angle
$\dot{G}$: foot angular velocity
T : thigh orientation angle
$\dot{T}$: thigh angular velocity
L_s : shank length
L_1 : shank center of mass distance to the knee joint
L_2 : foot center of mass distance to the ankle joint
m_1 : shank mass
I_{1z} : shank mass moment of inertia
m_2 : foot mass
I_{2z} : foot mass moment of inertia
k : stiffness coefficient of torsion spring
c : damping coefficient of rotary damper
α : torsion spring end position (TSEP)
E_T : kinetic energy
E_U : potential energy
g : gravity acceleration
L : Lagrangian
f : Rayliegh's dissipative function

APPENDIX II

Equations (A2-1), (A2-2), and (A2-3) refer to the position of the shank link.

$$x_1 = x_B + l_1 \cos B \tag{A2-1}$$
$$y_1 = y_B + l_1 \sin B \tag{A2-2}$$
$$z_1 = z_B \tag{A2-3}$$

Equations (A2-4), (A2-5), and (A2-6) refer to the position of the foot link.

$$x_2 = x_B + l_s \cos B - l_2 \sin A \sin B + l_2 \cos A \cos B \tag{A2-4}$$
$$y_2 = y_B + l_s \sin B + l_2 \sin A \cos B + l_2 \cos A \sin B \tag{A2-5}$$
$$z_2 = z_B \tag{A2-6}$$

Equation (7) and (8) refer to the kinetic and potential energy terms.

$$E_T = \frac{1}{2} m_1 (\dot{x}_1^2 + \dot{y}_1^2 + \dot{z}_1^2) + \frac{1}{2} m_2 (\dot{x}_2^2 + \dot{y}_2^2 + \dot{z}_2^2) + \frac{1}{2} I_{1z} \dot{B}^2 + \frac{1}{2} I_{2z} \dot{G}^2 \tag{A2-7}$$

$$E_U = m_1 g y_1 + m_2 g y_2 + \frac{1}{2} k (T - B - \alpha)^2 \tag{A2-8}$$

In (9) the lagrangian term is generated

$$L = E_T - E_U \tag{A2-9}$$

$$\frac{\partial}{\partial t}\left(\frac{\partial L}{\partial \dot{q}_i}\right) - \frac{\partial L}{\partial q_i} + \frac{\partial f}{\partial \dot{q}_i} = Q_i \tag{A2-10}$$

$$f = \frac{1}{2} c (\dot{T} - \dot{B})^2 \tag{A2-11}$$

$$G = A + B + \varphi \tag{A2-12}$$

$$\begin{aligned}
& m_1 l_1 (l_1 \ddot{B} - \ddot{x}_B \sin B + \ddot{y}_B \cos B - \dot{x}_B \dot{B} \cos B \\
& \quad - \dot{y}_B \dot{B} \sin B) + m_2 [-l_s \ddot{x}_B \sin B - l_2 \ddot{x}_B \sin(A+B) \\
& \quad - l_2 \dot{A} \dot{x}_B \cos(A+B) - l_s \dot{B} \dot{x}_B \cos B \\
& \quad - l_2 \dot{B} \dot{x}_B \cos(A+B) - l_s \dot{B} \dot{y}_B \sin B \\
& \quad - l_2 \dot{A} \dot{y}_B \sin(A+B) - l_2 \dot{B} \dot{y}_B \sin(A+B) \\
& \quad + l_s \ddot{y}_B \cos B + l_2 \ddot{y}_B \cos(A+B)] \\
& \quad + m_2 (l_s^2 \ddot{B} + 2 l_s l_2 \ddot{B} \cos A + l_2^2 \ddot{B} \\
& \quad + l_s l_2 \ddot{A} \cos A + l_2^2 \ddot{A}) \\
& \quad - m_2 (2 l_s l_2 \dot{A} \dot{B} \sin A) - m_2 [l_2^2 \dot{B}^2 \sin(2A) \cos^2 B] \\
& \quad - m_2 (l_s l_2 \dot{A}^2 \sin A) + I_{1z} \ddot{B} + I_{2z} (\ddot{A} + \ddot{B}) \\
& \quad - \{ m_1 [(l_1^2 \dot{B}^2 \sin B \cos B - \dot{x}_B l_1 \dot{B} \cos B) \\
& \quad + (l_1^2 \dot{B}^2 \sin B \cos B - \dot{y}_B l_1 \dot{B} \sin B)] \\
& \quad - m_2 [(l_s \dot{B} \cos B + l_2 \dot{A} \cos A \cos B \\
& \quad - l_2 \dot{B} \sin A \sin B - l_2 \dot{A} \sin A \sin B \\
& \quad + l_2 \dot{B} \cos A \cos B)(\dot{x}_B - l_s \dot{B} \sin B \\
& \quad - l_2 \dot{A} \cos A \sin B - l_2 \dot{B} \sin A \cos B \\
& \quad - l_2 \dot{A} \sin A \cos B - l_2 \dot{B} \cos A \sin B \} \\
& \quad + (l_s \dot{B} \sin B + l_2 \dot{A} \cos A \sin B + l_2 \dot{B} \sin A \cos B \\
& \quad + l_2 \dot{B} \cos A \sin B)(\dot{y}_B + l_s \dot{B} \cos B \\
& \quad + l_2 \dot{A} \cos A \cos B - l_2 \dot{B} \sin A \sin B \\
& \quad - l_2 \dot{A} \sin A \sin B + l_2 \dot{B} \cos A \cos B)] \\
& \quad - [m_1 g l_1 \cos B + m_2 g (l_s \cos B \\
& \quad - l_2 \sin A \sin B + l_2 \cos A \cos B) \\
& \quad - k (T - B - \alpha)]\} - c (\dot{T} - \dot{B}) = 0
\end{aligned} \tag{A2-13}$$

Equation (A2-13) is the dynamic equation of the above knee prosthetic leg with the SEP controlling parameter which it is called α angle.

REFERENCES

[1] H. Herr, G. P. Whiteley, and D. Childress, "*Chapter5: Cyborg Technology, Biomimetic Orthotic and Prosthetic Technology*," ISBN 0-8194-4872-9, SPIE, 2003.
[2] G. Karimi, and O. Jahanian, "Designing a prosthetic rotational kneed leg with passive dynamic consideration," BS Thesis, IAUM, 2006.

[3] J. Nishii, and M. Nakamura, "A determinant of the leg swing trajectory during walking," *Proceedings of the Symposium on Biological and Physiological Engineering*, vol. 19, 2004, pp 81-82.

[4] S. Mochon, and T. A. McMahon,"Ballistic walking," *J.Biomech*, vol. 13, Pergamon Press Ltd., pp. 49-57, 1980.

[5] R. W. Selles, J. B. J. Bussmann, R. C. Wagenaar, and H. J. Stam,"Comparing predictive validity of four ballistic swing phase models of human walking," *J. Biomech*, vol. 34, pp. 1171–1177, 2001.

[6] R. W. Selles, J. B. J. Bussmann, R. C. Wagenaar, and H. J. Stam, "Effects of prosthetic mass and mass distribution on kinematics and energetics of prosthetic gait: A systematic review," *Arch. Phys. Med. Rehabil.* , vol. 80, pp. 1593-9, 1999.

[7] B. Lotfi, O. Jahanian, and G. Karimi, "Statistical modeling of a 2D straight leg passive dynamic walker Machine," *Proceedings of the International Conference on Modeling and Simulation*, Malaysia, 2006, Paper No. 145.

[8] M. S. Garcia, "Stability, scaling, and chaos in passive dynamic gait models," Ph.D.Thesis, Cornell University, Ithaca, NY USA.

[9] A. G. Baines, "Knee design for a bipedal walking robot based on a passive-dynamic Walker," BS Thesis, Department of Mechanical Engineering, Massachusetts Institute of Technology, 2005.

[10] H. Collins, "*Dynamic Walking Principles Applied to Human Gait*," Ph.D.Thesis, University of Michigan, 2008.

[11] S. N. Whittlesey, R. E. A. van Emmerik, and J. Hamill, "The swing phase of human walking is not a passive movement," *Motor Control*, vol.4, Human Kinetics Publishers Inc., pp. 273-292, 2000.

[12] S. Zahedi, "Lower Limb Prosthetic Research In The 21.st. Century," ATLAS OF Prosthetics, [www.endolite.com]

[13] M. Y. Zarrugh, and C. W. Radcliffe, "Simulation of Swing Phase Dynamics in Above Knee Prostheses," *J. Biomech*, vol. 9, pp. 283-292, 1976.

[14] C. S. Tsai, and J. M. Mansour," swing phase simulation and design of above knee prostheses," *Biomech. Eng*., vol. 108, pp. 65-72, 1986.

[15] S. Blumentritt, H. W. Scherer, J. W. Michael, and T. Schmalz, "Transfemural Amputees walking on a rotary hydraulic prosthetic knee mechanism," *J. Prosthet. Orthot*., vol. 10, no. 3, pp. 61-70, 1998.

[16] J. H. Kim, and J. H. Oh, "Development of an above knee prosthesis using MR damper and leg simulator," *Proceedings of the 2001 IEEE International Conference on Robotics 8 Automation*, Seoul, Korea. May 21-26, 2001, pp. 3686-3691.

[17] H. Herr, and A. Wilkenfeld, "User-adaptive control of a magnetorheological prosthetic knee," *Ind. Robot*, vol. 30, no. 1, pp. 42–55, 2003.

[18] A. O. Kapti, and M. S. Yucenur, "Design and control of an active artificial knee joint," *Mech. Mach. Theory*, vol. 41, pp. 1477–1485, 2006.

[19] E. C. M. Villalpando, and H. Herr, "Biomimetic active prosthetic knee with antagonistic actuation," Dynamic Walking 2009, held at Simon Fraser University, Vancouver, [www.dynamicwalking.org/dw2009].

[20] D. Joshi, and S. Anand, "Smart and Adaptive Lower limb Prosthesis," unpublished.

[21] E. C. M. Villalpando, and H. Herr, "Agonist-antagonist active knee prosthesis: A preliminary study in level-ground walking," *J. Rehabil. Res. Dev*., vol. 46, no. 3, pp. 361–374, 2009.

[22] D. A. Winter,"*Biomechanics and motor control of human movement*," Fourth edition, John Wiley & Sons, Inc. ISBN: 978-0-470-39818-0, 2009.

[23] M. R. Yeadon, and M. Morlock, "The appropriate use of regression equations for the estimation of segmental inertia parameters," *J. Biomech.*, vol. 22, pp. 683-689, 1989.

[24] F. C. Anderson, and M. G. Pandy, "Dynamic optimization of human walking," *Biomech. Eng*., vol. 123, pp. 381-390, 2001.

[25] J. R. Gage, P. A. Deluca, and T. S. Renshaw, "Gait Analysis: Principles and Applications," *J. Bone Joint Surg*., vol. 77, pp. 1607-1623, 1995.

[26] J. M. Baydal, R. Barbera, J. M. B. Lois, A. Page, and J. Prat, "Application of genetic algorithms as optimization methodology in the design of orthosis," Institute of Biomechanics of Valencia (IBV), 2001.

[27] A. Chipperfield, P. Fleming, H. Pohlheim, and C. Fonseca, "Genetic algorithm toolbox user's guide," Department of automatic control and systems engineering, University of Sheffield.

Open Science Index, Mechanical and Mechatronics Engineering Vol:4, No:10, 2010 publications.waset.org/11886.pdf