World Academy of Science, Engineering and Technology
International Journal of Environmental and Ecological Engineering
Vol:13, No:9, 2019

Measuring the Effect of Ventilation on Cooking in Indoor Air Quality by Low-Cost Air Sensors

Andres Gonzalez, Adam Boies, Jacob Swanson, David Kittelson

***Abstract*—**The concern of the indoor air quality (IAQ) has been increasing due to its risk to human health. The smoking, sweeping, and stove and stovetop use are the activities that have a major contribution to the indoor air pollution. Outdoor air pollution also affects IAQ. The most important factors over IAQ from cooking activities are the materials, fuels, foods, and ventilation. The low-cost, mobile air quality monitoring (LCMAQM) sensors, is reachable technology to assess the IAQ. This is because of the lower cost of LCMAQM compared to conventional instruments. The IAQ was assessed, using LCMAQM, during cooking activities in a University of Minnesota graduate-housing evaluating different ventilation systems. The gases measured are carbon monoxide (CO) and carbon dioxide (CO_2). The particles measured are particle matter (PM) $_{2.5}$ micrometer (μm) and lung deposited surface area (LDSA). The measurements are being conducted during April 2019 in Como Student Community Cooperative (CSCC) that is a graduate housing at the University of Minnesota. The measurements are conducted using an electric stove for cooking. The amount and type of food and oil using for cooking are the same for each measurement. There are six measurements: two experiments measure air quality without any ventilation, two using an extractor as mechanical ventilation, and two using the extractor and windows open as mechanical and natural ventilation. 3The results of experiments show that natural ventilation is most efficient system to control particles and CO_2. The natural ventilation reduces the concentration in 79% for LDSA and 55% for $PM_{2.5}$, compared to the no ventilation. In the same way, CO_2 reduces its concentration in 35%. A well-mixed vessel model was implemented to assess particle the formation and decay rates. Removal rates by the extractor were significantly higher for LDSA, which is dominated by smaller particles, than for $PM_{2.5}$, but in both cases much lower compared to the natural ventilation. There was significant day to day variation in particle concentrations under nominally identical conditions. This may be related to the fat content of the food. Further research is needed to assess the impact of the fat in food on particle generations.

***Keywords*—**Cooking, indoor air quality, low-cost sensor, ventilation.

I. Introduction

DURING the last years there has been increasing concern over the effect of indoor air quality (IAQ) [1]. Problems of indoor air quality are risk factors for human health in low, middle, and high-income countries [2]. The concentration of indoor pollution is twice compared to outdoor air pollution [3]. This is important because Americans spend about 90 percent or more of their time indoors [4]. The smoking, sweeping, and stove and top stoves use are the activities have the major contribution to the indoor air pollution [3]. The outdoor air pollution also affects the IAQ [5]. The aspects influence in the IAQ from emission related to cooking activities are cooking methods, cooking materials, fuels, and ventilation [6]. 1

The fuel use for cooking has significant impact on the IAQ [7]. The three main fuels use are solid, gas, and electric. The solid fuels such as coal, wood, and crop residues are used for around 50% of world's population, mainly in developing countries [8]. These types generate high concentrations of particles, carbon monoxide (CO) [9], volatile organic compounds such as benzene, toluene, and xylene [10], and nitrogen dioxide (NO_2) and sulfur dioxide (SO_2) [11]. Natural gas generates high emissions of CO [12] while liquefied petroleum gas generates high emissions of NO_2 and CO as well [13]. There are no significant emissions from the stove and stovetop themselves using electricity as power supply. This is because there is no fuel combustion. This study is focus on measuring the IAQ using an electric stove and stovetops.

The deep-frying caused the largest increase in particles reaching 6.0 x 105 cm-3 that is 24 times higher than background concentration and 90% of those particles are nanoparticles. The pan-frying, stir-frying, and boiling increase 4.4, 3.7, and 2.8 times the concentration respectively [14]. Thus, cooking by oil emits more airborne agents, such as benzene and formaldehyde, compared to cooking by water [14]-[15]. The main factors contribute to higher emission are frying, the browning of food, the presence of oil and fat, the pan temperature, and the pan type [16]. Exposure to any form of frying could increase the risk of lung cancer in nonsmoking women [17]. The exposure to cooking activities produce asthma symptoms in children [18]. Cooking activities in an electric stove produces levels of PM_{10} levels ranged 1,200-1,300 $\mu g \cdot m^{-3}$, formaldehyde levels ranged 130-420 $\mu g \cdot m^{-3}$, polycyclic aromatic hydrocarbons (PAHs), NO_2 levels excess 400 ppb in one-hour, and CO levels ranged 1-5 ppm [19]. Benzene and formaldehyde have cancer-related health impacts [20]. The PM_{10} EPA standard is 150 $ug \cdot m^{-3}$, therefore the concentrations related to emissions from cooking activities are ~ 10 times higher. Exposure to concentrations higher than 100 $\mu g \cdot m^{-3}$ provoke alveolar inflammation, with release of mediators capable, in susceptible individuals, of causing exacerbations of lung disease and of increasing blood coagulability [21]. The NO_2 EPA standard for one-hour is 100

A. G. is with the Department of Civil, Environmental, and Geo-Engineering, University of Minnesota., MN 55455 USA (phone: 612-625-5522; fax: 612-625-5522; e-mail: gonza817@umn.edu).

A. B. is with Department of Engineering, University of Cambridge

J. S. is with Department of Integrated Engineering, Minnesota State University, Mankato

D. K. is with Department of Mechanical Engineering, University of Minnesota.

ppb, thus the cooking activities produce four times concentration above this standard. NO_2 exposure causes adverse respiratory health effects, and in spaces with low air-circulation it causes severe lung injury and death [22]. Increase in 5 ppb NO_2 in 24 hour-average causes an increase of 6% in the asthma related hospital admissions in children between 5-14 years [23]. NO_2 increases of ~25 ppb in one-hour exposure is associated with 1.3% increase in the daily number of deaths [24].

The ventilation to control and reduce the air pollution concentration include hood system (mechanical) and natural ventilation that consist to open the windows nearby cooking activities [25]. The main purpose of ventilation is to create a more suitable IAQ by diluting and removing the pollutants produce [26] during cooking activities. The hood system does not remove, significantly, the air pollution [27]. The natural ventilation is more efficient, compared to mechanical system, to improve the IAQ, furthermore, both system working at the same time achieve higher remove of pollutants during cooking activities [25].

The low-cost, mobile air quality monitoring (LCMAQM) sensors, can be a feasible option to measure the air quality in a kitchen. The LCMAQM is more accessible for researchers and local governments or authorities because of its cost. The cost of typical sensors for LCMAQM are only $150-200 each. A wireless Mobile Autonomous Air Quality Sensor box (MAAQSbox) to measure air pollution was developed. The MAAQSbox contains LCMAQM sensors (gas and particle) and a wireless broadcasting system. The LCMAQM technology has limitations. The data obtained by these sensors are less reliable compared to the data collected by sensors from an air monitoring station (AMS) [28]. Environmental conditions, mainly ambient temperature, and humidity [29] affect the output of LCMAQM sensors. Thus, there are challenges to using this sensor technology in the field where it is impossible to control temperature and relative humidity. For example, in periods of high temperatures, LCMAQM sensors diverge from the reference sensors affecting the results of measurements [30]-[34]. Also, there are cross-sensitivities of LCMAQM sensors with other gases, thus, field calibration is required to obtain valid data [30]. It was examined the quality of the LCMAQM data, by assessing the performance of MAAQSbox relative to Minnesota Pollution Control Agency AMS regulatory equipment. The calibration was conducted in the field evaluating the impact of temperature, relative humidity, and cross-sensitivity in the calculation of the concentrations.

The aims of this study are to measure the IAQ during cooking activities in a University of Minnesota graduate-housing and assess the effectiveness of both mechanical and natural ventilation systems. The measurements were conducted using LCMAQM sensors. The gases measured were carbon monoxide (CO) and carbon dioxide (CO_2). The particle measured were $PM_{2.5}$ and lung deposited surface area (LDSA).

II. Materials and Methods

A. Materials

The measurements were conducted in Como Student Community Cooperative (CSCC) which is a graduate housing at University of Minnesota. The apartment has two bedrooms, one bathroom, and living room and kitchen in the same area. The kitchen and living room have an area of 77.8 m^3. During the experiments, the bedrooms and bathroom doors were closed, therefore the measurement area is living room and kitchen. This is shown within the red line in Fig. 1.

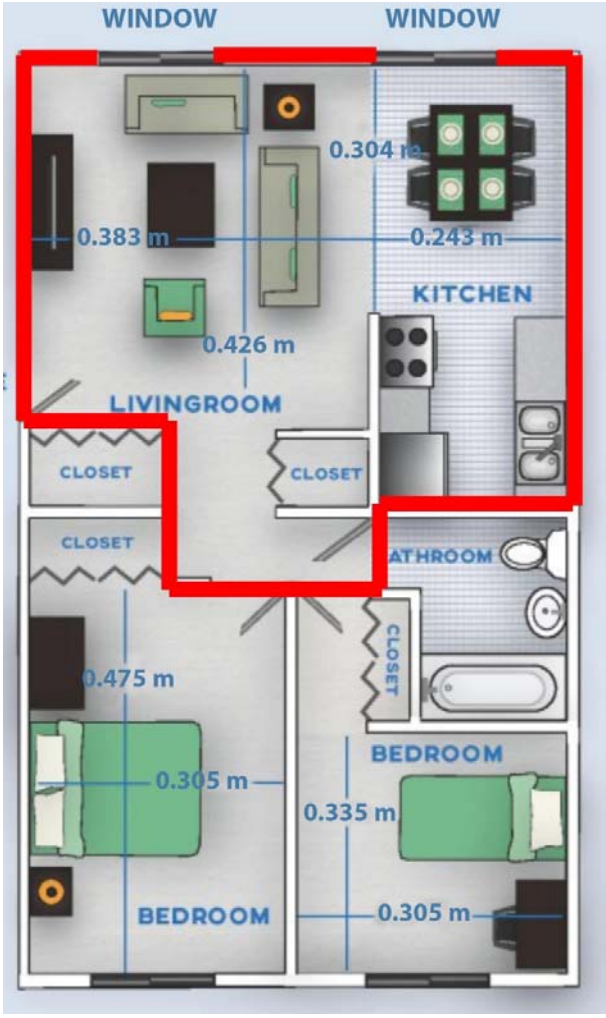

Fig. 1 Graduate housing at University of Minnesota

The meat used for cooking was a boneless beef top sirloin steak varying in weight from 225 to 239 grams. The meat was cooked in on the four electrical burners. The potatoes were cooked in the oven and its weight was 258 grams. The olive oil was used to fry the meat and cook potatoes. The range is an electrical Kenmore with an oven and four top-burners. The range hood is an Air-King model AD1305 that has a combination grease and charcoal odor filter. This is a ductless operation range hood.

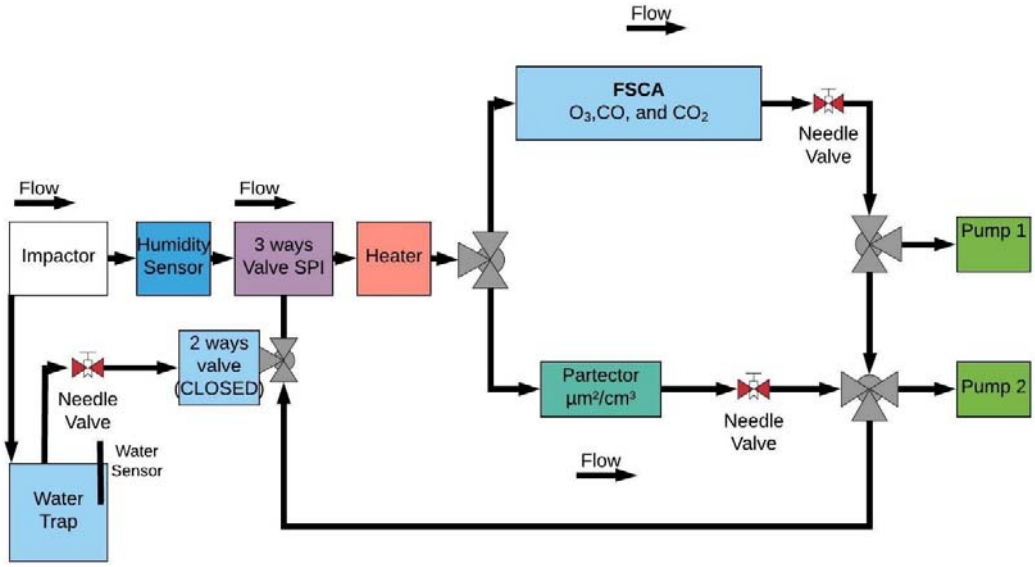

Fig. 2 Schematic of The Mobile Autonomous Air Quality Sensor box (MAAQSbox)

B. Description of the MAAQSbox

The MAAQSbox is a device that allows for autonomous conditioning of sample streams and houses several gas and particle sensors. The MAAQSbox can function under various and extreme weather conditions. For instance, it has a system to protect the sensors during rain or high humidity. The MAAQSbox contains the sensors for detection, pumps for advecting flow through the device, a heater to control the temperature, and an Arduino for system control. As shown in Fig. 2, air flows through an impactor, removing particles larger than 10 µm. Then, a humidity sensor determines the relative humidity, giving a signal to the Arduino allowing for determination of whether it is safe to advect flow into the sensor array. Subsequently, the sample air flows through 3-way valve and heater to maintain temperature and humidity levels within desired targets. Finally, a 3-way connector distributes the air to sensor areas. The MAAQSbox holds three gas sensors and one particle sensors. The gas sensors included in the calibration are CO and O_3, B4 sensors (AlphaSense, Inc.) and CO_2 (Yoctopuse). The Partector that measures lung deposited surface area (LDSA). The $PM_{2.5}$ were measured, externally of MAAQSbox, by SidePak.

C. Sensor Technology

The CO and O_3 gases are measured by Alphasense B4 sensors. A B4 sensor contains three main components. Each sensor contains Working, Auxiliary, Reference, and Counter electrodes [35]. The target gas diffuses through a membrane where occur electrochemical oxidation (CO) or reduction (O_3) at the working electrode, generating a current signal [34], [35]. This electric signal is balanced by the counter electrode [34], [36]. The reference electrode anchors the working electrode and helps to maintain working electrode performances and its sensitivity [36]. The auxiliary electrode is not exposed to the target gas. This is to provide the background current to the current observed in the working electrode [37]. An individual sensor board also designed by Alphasense is used to reduce environment noise achieving good ppb or ppm resolution [34] [38].

The CO_2 sensor uses non-dispersive infra-red absorption (NDIR) [39] technology based on a SenseAir K30 module [40]. CO_2 molecule, under the influence of infrared (IR) light, absorbs the light at a specific wavelength (4.2-4.3 µm) [41]. The number of photons absorbed is proportional to the CO_2 concentration [42].

Traditional concerns and research on particles have focused on the mass-concentration of particles [43]. However, the lung-deposited surface area may be more useful in predicting the adverse effects of particles on human health [44]. The Partector measures particles in a size range from 10 nm to 10 µm but the measurement is weighted to approximate the product of particles surface area and inhaled deposit fraction in the alveolar region of the respiratory system [45]. The Partector is not considered LCMAQM sensor because its cost is ~ $5,000, but this device is still considerably cheaper than other ultrafine particle measurement equipment.

The SidePak Personal Aerosol Monitor AM510 is a belt mounted laser photometer [46]. The aerosol stream passes through an impactor which removes particles larger than 2.5 µm. Smaller particles continue with the stream into the optical chamber, where they are illuminated with a focused beam of laser light at a wavelength of 670 nm [47]. This sensor is a light
scattering detector [48]. The size range of measurement is between 0.3-10 µm [49].

D. MAAQSbox Field Calibration

The aim of the field calibration was to evaluate low-cost sensor performance compared to a reference instruments in the field. AMS provide robust data of the air pollution. Thus, the LCMAQM sensors were installed next to an AMS to compare its results with the low-cost sensors. This field calibration was conducted for CO and O_3, gas sensors. The calibrations of

LCMAQM sensors were determined by multivariate linear regressions (MLR). The CO and O_3 sensors presented R^2 values of 0.95 and 0.79 respectively. The standard error (SE) for CO was 0.04 and for O_3 was 5. The fit improved when the temperature and humidity were included. The field calibration was conducted for 244 hours. The SidePak and the CO_2 sensor were run using factory calibration. The AMS does not measure CO_2.

TABLE I
CALIBRATION RESULTS OF B4 GAS SENSORS

Sensor	N	R^2	SE
CO	244	0.95	0.04
O_3	244	0.79	5

E. Measurements and Statistical Analysis

1) Measurements

There were three different experiments and each experiment was conducted twice. This is to assess the consistency between the measurements under same ventilation conditions. The windows were opened one hour before beginning each measurement. The steady conditions in terms of concentration were CO_2 less than 450 ppm, $PM_{2.5}$ less than 6 $\mu g \cdot m^{-3}$, and LDSA less than 2 $\mu m2 \cdot cm^{-3}$. The inside humidity varied between 32%-46% and temperature between 23°-24°C. Once the steady conditions were achieved the windows were closed and the measurements begun 10 minutes after this. 23 minutes later, the potatoes were put in the oven at 176°C and 5cc of olive oil. In the first experiment everything was maintained in the same condition, that is windows were kept closed and no extractor was used. In the second experiment the extractor was turned on this time, but the windows were kept closed. In the third experiment the extractor was turned on and windows were opened (EWO). Three minutes after the potatoes were put in the oven, the pan was on the burner with 5cc of olive oil at level 5 where 1 is the lowest and 9 is the highest; four minutes later the meat was put in the pan. After 11 minutes of cooking, the pan power was reduced to 3. Then, after 10 more minutes the oven and burner were turned off. The measurements continued for 25 minutes after this. The total time of measurement was 76 minutes.

2) Statistical Analysis

The signals of CO, O_3, and CO_2 sensors were read by an Arduino. In the same way, humidity, rain, water sensors, and valve positions are read by another Arduino board. All data from both Arduino boards were sent to Yocto-Serial. The data from Partector were read by Yocto-RS232.The data were stored in each Yocto-Board and then the data were retrieved one time per day. The data for $PM_{2.5}$ were storage in the SidePak. The statistical analysis was performed by assessing the concentration by second and averaging the data per minute. The data are presented comparing the three experiments with different ventilation conditions. The data analysis was conducted by Matlab, R, and Excel. Ozone and carbon monoxide were both very low and not influenced significantly by cooking and will not be further discussed.

III. RESULTS AND DISCUSSION

Figs. 3-5 are plots and LDSA, $PM_{2.5}$, and CO_2 against time for the three different experimental conditions. Individual data points are shown along with best fit lines associated with the model described below. The average LDSA concentration during the measurements without mechanical and natural ventilation is 16 $\mu m^2 \cdot cm^{-3}$ and with mechanical ventilation(extractor) is 15 $\mu m^2 \cdot cm^{-3}$. Using EWO, the concentration achieved is 6.9 $\mu m^2 \cdot cm^{-3}$. The average $PM_{2.5}$ concentrations are also higher without ventilation compared to using the extractor. The concentrations without ventilation and using the extractor are 13 $\mu g \cdot m^{-3}$ and 11 $\mu g \cdot m^{-3}$ respectively. Using EWO, the average $PM_{2.5}$ concentration is 7.4 $\mu g \cdot m^{-3}$. Thus, it would seem the extractor had minor influence on LDSA and $PM_{2.5}$ concentrations, while as expected opening the window significantly reduced them.

In order to understand what was happening in the kitchen in more detail, we model the kitchen as a simple well stirred vessel with sources and sinks. Taking LDSA as an example, let s be concentration of LDSA in the kitchen that has a total volume of V so that the total LDSA surface area in the room is $S = sV$. The rate of increase of surface area in the room is the difference between surface addition and removal rates.

$$\dot{S}_{in} - \dot{S}_{out} = \frac{dS}{dt} = V\frac{ds}{dt}$$

$$\dot{S}_{out} = \dot{Q}s + A_w V_d s = Ks$$

$$K = \dot{Q} + A_w V_d$$

here K is the total loss coefficient and consists an effective ventilation rate, Q_v, and the rate of particle deposition to the walls, the product of the total wall surface area of the kitchen, A_w, and particle deposition velocity, V_d.

$$\dot{S}_{in} = V\frac{ds}{dt} + Ks$$

$$\frac{\dot{S}_{in}}{V} = \frac{ds}{dt} + \frac{K}{V}s$$

Then let $C = \frac{\dot{S}}{V}$ = the rate surface area, LDSA, is added to the kitchen by cooking divided by the total room volume and $\frac{K}{V} = \frac{1}{\tau}$ where τ is the combined wall and effective ventilation loss time constant, then:

$$C = \frac{ds}{dt} + \frac{s}{\tau}$$

This is a first order linear differential equation the general solution of which is:

$$s = A + Be^{\left(\frac{-t}{\tau}\right)}$$

Then if $s = s_0$ at $t = t_0$ we can solve for A and B, $A = C\tau$ and $B = s_0 - C\tau$, and

$$s = C\tau + (s_0 - C\tau)e^{\left(\frac{-(t-t_0)}{\tau}\right)}$$

We have used this model to examine the measurements of LDSA, $PM_{2.5}$ and CO_2. Fitted trends and shown in the figures and fitted parameters are summarized in Table II.

TABLE II
WELL STIRRED VESSEL FIT PARAMETERS. THE TOTAL ROOM VOLUME WAS 77.8 M^3, TOTAL ROOM WALL SURFACE AREA 73.9 M^2, EXTRACTOR FLOW RATE 7.1 M^3/MIN

LDSA	C [μm^2/s]	τ [min]	K [m^3/min]	Vd [cm/s]	h_e	Q win [m^3/min]
No vent	8.5E+06	31.8	2.4	0.055		
Extractor	9.9E+06	22.9	3.4	0.055	0.135	
Window	6.8E+06	8.3	9.4	0.055	0.135	6.0
Average	8.4E+06					
$PM_{2.5}$	dPM2.5/dt [mg/s]	τ [min]	K [m^3/min]	Vd [cm/s]	h_e	Q win [m^3/min]
No vent	1.6E+00	115.0	0.7	0.015		
Extractor	1.8E+00	65.1	1.2	0.015	0.073	
Window	2.3E+00	11.8	6.6	0.015	0.073	5.4
Average	1.9E+00					
CO_2		τ [min]	K [m^3/min]			Q win [m^3/min]
Windows		9.6	8.1			8.1

In Fig. 3 we see that the LSDA begins to rise rapidly shortly after meat is added to the pan with the fit indicating formation rates ranging from 6.8 to $9.9 \cdot 10^6$ μm^2/s. The rise in LDSA stops almost immediately when the heat is reduced, but exponential decay does not start until the range and oven are turned off. Decay time constants are strongly dependent on conditions decreasing from 31.8 to 22.9 to 8.3 minutes for no vent, extractor, and extractor plus window respectively as the loss coefficient K increases from 2.4 to 3.4 to 9.4 m^3/min. If we assume that for the no vent case losses are entirely due to wall deposition, this corresponds to an average deposition velocity of 0.055 cm/s. When the extractor is turned on, K increases by 1.0 m^3/min to 3.4 m^3/min. If we assume this does not change wall losses significantly, the efficiency of removal of LDSA by the extractor is the ratio of the incremental removal rate of 1.0 m^3/min to the extractor flow rate of 7.1 m^3/min, 13.5%. When the window is opened K increases to 9.4 m3/min. Thus, the effective ventilation rate by the window is 6.0 m3/min. The details are shown in Fig. 3.

As shown in Fig. 4, $PM_{2.5}$ behaves somewhat differently from LDSA in that for the no vent and extractor cases the rate of increase does not decrease when heat is reduced. Consequently, the model was fit to the entire heating period. On the other hand, in the window open case the concentration peaked shortly after the end of the high heat period, so the model was fit to the high heat period. In Table II, we see that formation rates calculated from the model ranged from 1.6 to 1.8 to 2.3 μg/s, averaging 1.9 μg/s. Decay time constants were longer ranging from 115 to 11.8 min. and corresponding loss coefficients lower compared to the LDSA case. Using the same assumptions as for the LDSA case gives a deposition velocity of 0.015 cm/s, extractor efficiency of 7.3%, and effective window ventilation rate of 5.4 m^3/s.

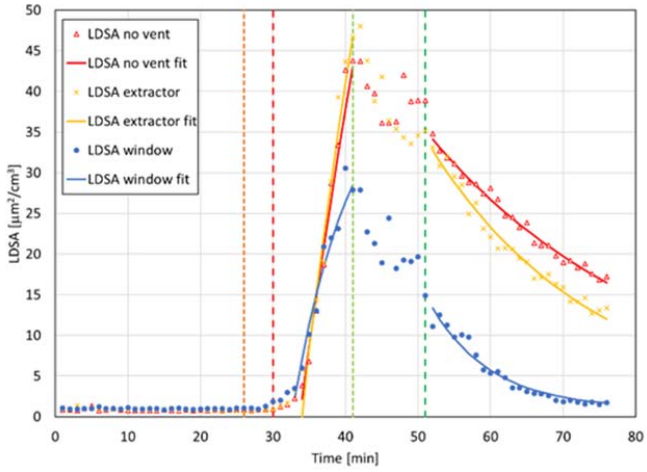

Fig. 3 Lung Deposited Surface Area plotted against time for the three experimental conditions, measured data and fit lines shown. Red dotted/dashed lines indicate the start of heating the followed by putting the meat in the pan, green dotted/dashed lines indicate, reduction of burner heat, followed by turning off heating element and oven

LDSA is primarily a measure of ultrafine particles, mainly below 100 nm while $PM_{2.5}$ particle mass is mainly found above about 100 nm. Alvin [50] did a detailed study of deposition velocities on indoor walls in turbulent flow and found that deposition velocity decreased with increasing particle size in the range from 10 nm to 1 μm, consistent with our observation of lower deposition velocity for the larger $PM_{2.5}$ particles compared to LDSA particles. However, they reported lower deposition velocities than we have observed here, with values no higher than 0.01 cm/s, even for very small 10 nm particles. This suggests that the losses we observed in the no vent case were not only due to wall losses but included some ventilation unaccounted for.

Filtration efficiency typically increases with decreasing particle size below about 300 nm diameter [51] so the higher extractor efficiency observed for LSDA compared to $PM_{2.5}$ would be expected. On the other hand, turning on the extractor may increase other losses, so our results are likely upper estimates.

As shown in Fig. 5, CO_2 was not influenced by cooking or the extractor. For the no vent and extractor cases there was a steady slow increase in CO_2 in the room as a result of the two occupants. When the widow was opened CO_2 followed an exponential decay back to ambient levels. The decay time constant was 9.6 min. corresponding to a ventilation rate of 8.1 m3/min, about 25% higher than additional effective ventilation rates observed for LDSA and $PM_{2.5}$.

There are differences between measurements under the same conditions, specifically for particles. The LDSA concentration for all experiments before cooking were steady, ranging 0.8-1 μm²·cm⁻³. The concentration between minute 30 and 51 for the no ventilation first experiment was 23.2 μm²·cm⁻³ while for the second one was 31.6 μm²·cm⁻³. In the same condition, $PM_{2.5}$ concentration also presented difference. The concentration between minute 30 and 51 for the no

ventilation first experiment was 10.7 μg·m⁻³ while for the second one was 14.5 μg·m⁻³. These differences were 30% for LDSA and $PM_{2.5}$ measurements. This is shown in Figs. 6 (a) and (b). The CO_2 differences between minute 30 and 51 in the two experiments with no ventilation was 41 ppm which represent 5%.

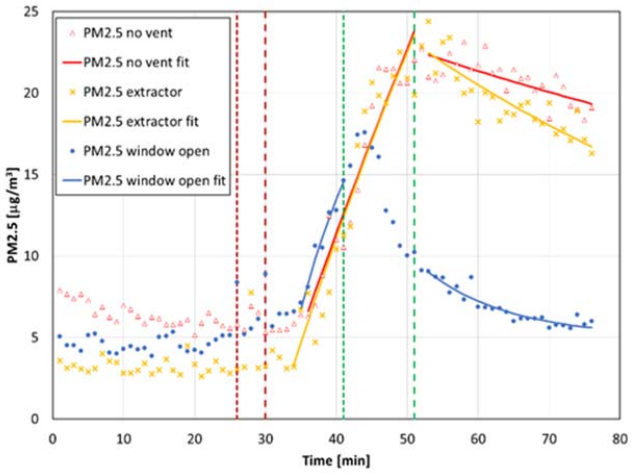

Fig. 4 $PM_{2.5}$ plotted against time for the three experimental conditions, measured data and fit lines shown. Red dotted/dashed lines indicate the start of heating the followed by putting the meat in the pan, green dotted/dashed lines indicate, reduction of burner heat, followed by turning off heating element and oven

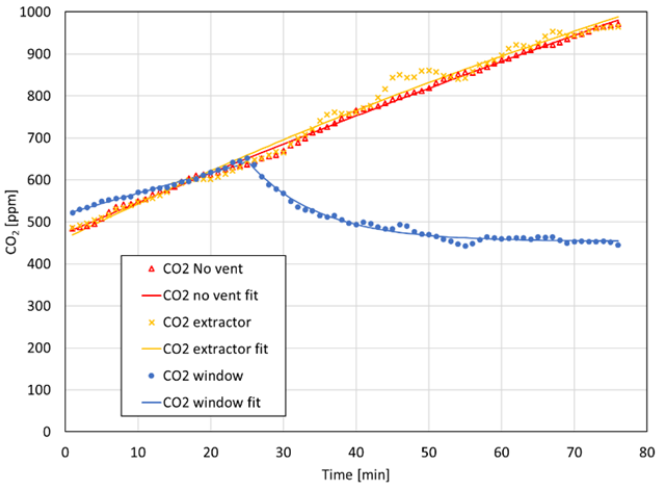

Fig. 5 CO_2 plotted against time for the three experimental conditions, measured data and fit lines shown. For the window case, window was opened 23 minutes after start, other conditions as in Fig, 3 and 4

The concentration between minute 30 and 51 for extractor first experiment was 34 μm²·cm⁻³ while for the second one was 22 μm²·cm-³. In the same condition, $PM_{2.5}$ concentration also presented difference. The concentration between minute 30 and 51 for extractor first experiment was 14.9 μg·m⁻³ while for the second one was 9.2 μg·m⁻³. These differences were 43% for LDSA and 47% for $PM_{2.5}$. This is shown in Figs. 6 (c) and (d). The CO_2 differences between minute 30 and 51 in the two experiments with extractor was 59 ppm that represented 8%.

The LDSA concentration between minute 30 and 51 for EWO first experiment was 21 μm²·cm-³ while for the second one was 14.4 μm²·cm-³. In the same condition, $PM_{2.5}$ concentration between minute 30 and 51 for the EWO first and second experiments were 11.1 and 11.9 μg·m⁻³ respectively. These differences were 38% for LDSA and 7% for $PM_{2.5}$. The CO_2 differences between minute 30 and 51 in the two experiments with EWO was 27 ppm that represents 5%.

With EWO, all the differences between measurements under same conditions were lower compared to no ventilation and extractor. The different concentrations between first and second experiment with no ventilation may be explained because the meat in the second experiment was 7 grams heavier. However, for extractor and EWO the meat was heavier for the second experiment, but the concentrations were lower. The information of the fat percentage was available only for the whole meat and not for each piece. Other studies show that the percent of fat in the meat is a key factor that explain higher or lower concentrations under same conditions [52], [53]. Thus, the difference between measurements conducted under the same conditions might be explained by the percentage of fat of each piece of meat.

IV. Conclusion

The Mobile Autonomous Air Quality Sensor box was used to measure indoor air quality in a small kitchen during meal preparation. Under the conditions these experiments were conducted, opening the window, the natural ventilation, is the most efficient system to control and improve the IAQ. This result is consistent with other studies [25], [27]. However, as Minnesota average low temperature during winter range -4.3°C to -13.6°C using natural ventilation as an option to improve the IAQ is limited.

A simple well stirred vessel model has been used to help examine LDSA and $PM_{2.5}$ formation and decay rates. Particle formation rates varied somewhat day to day, ranging from 6.8 to $9.9 \cdot 10^6$ $\mu m^2 \cdot s^{-1}$ for LDSA and from 1.6 to 2.3 μg $\cdot s^{-1}$ for $PM_{2.5}$. With the windows open, time constants for particle removal were short, 8.3 and 11.8 minutes for LDSA and $PM_{2.5}$, respectively.

Although average LDSA and $PM_{2.5}$ concentrations were only slightly reduced by using the extractor, removal rates were significantly increased. It reduced removal time constants from 32 to 23 minutes for LDSA and from 115 to 65 minutes for $PM_{2.5}$. Higher removal rates, shorter time constants, for LDSA compared to $PM_{2.5}$ are consistent with LDSA being weighted toward smaller particles than $PM_{2.5}$. Fundamental particle physics predicts increasing deposition and filtration efficiencies with decreasing particle size in the submicron size regime. Others have reported that more than 90% of particles generated in the kitchen are smaller than 100 nm [54].

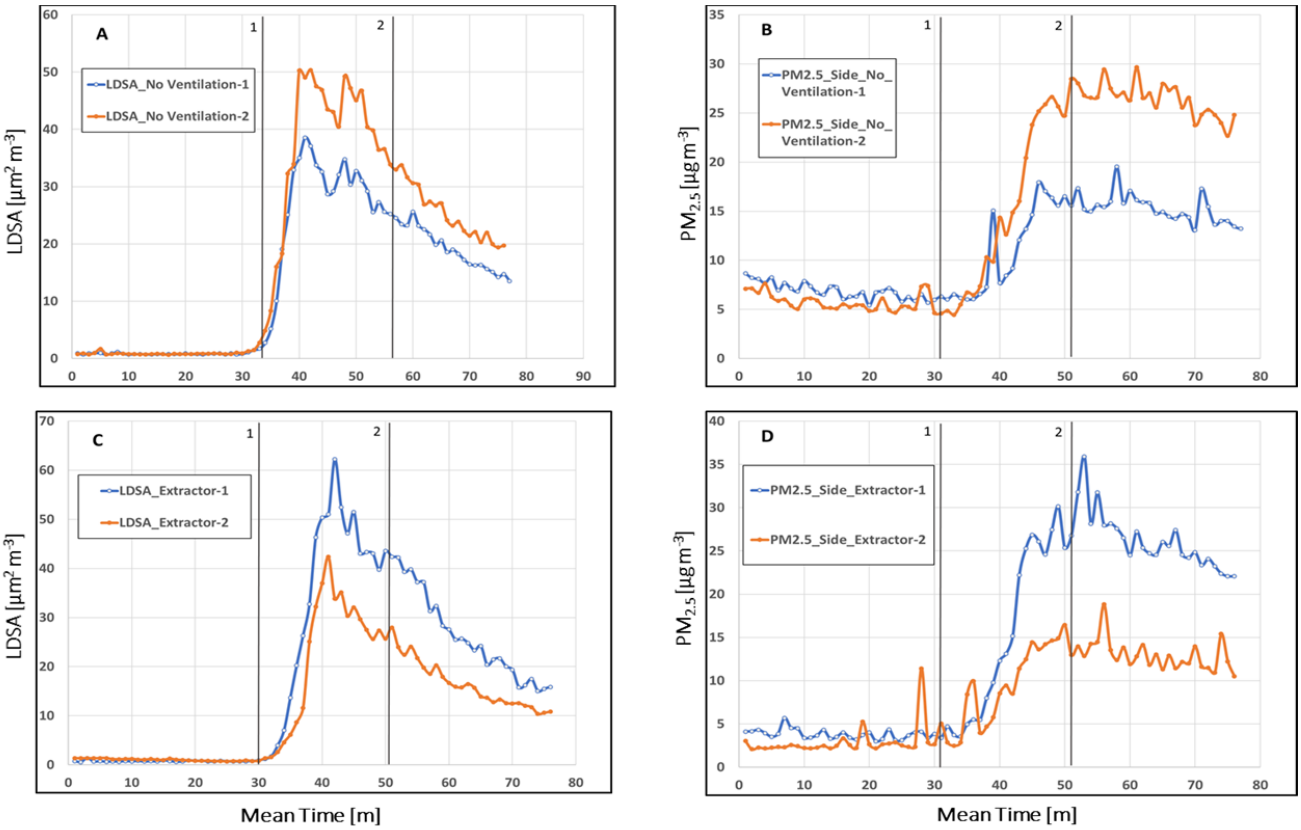

Fig. 6 Particle differences between measurements under same conditions

Average LDSA indoor concentrations have been reported to be 70% of outdoor, however during cooking LDSA concentrations can be higher [55]. The average and maximum LDSA concentrations measured here during cooking without ventilation were 24 and 44 $\mu m^2 \cdot cm^{-3}$, respectively. These are in the same range or slightly lower compared to outdoor concentration measured in cities such as Barcelona [56], Basel [57], and Lisbon [58] with 37, 30, and 62 $\cdot \mu m^2 \cdot cm^{-3}$, respectively.

During the experiment without ventilation the average $PM_{2.5}$ was 16 $\mu g \cdot m^{-3}$ and the highest was 23 $\mu g \cdot m^{-3}$. The ambient average daytime $PM_{2.5}$ level in Minneapolis is 10 $\mu g \cdot m^{-3}$ and the highest 1-hour concentration is 28 $\mu g \cdot m^{-3}$ [59]. The $PM_{2.5}$ EPA standard for 24-hours is 35 $\mu g \cdot m^{-3}$.

CO_2 is an indicator of the occupancy pattern [60]. There were two adults in the room during the experiments. During the experiments without ventilation and with the extractor there was a nearly linear increase of CO_2 concentration with time increasing from about 480 to nearly 1000 ppm. Neither the cooking (it was an electric stove) nor the extractor had a significant impact on the concentration. On the other hand, when the window was opened the concentration quickly returned to ambient with a time constant of 9.6 minutes corresponding to a ventilation rate of 8.1 $m^3 \cdot min^{-1}$.

The model results are based, in each case, no vent, extractor, and window on the average of two days testing for each condition. This may mask some of the variability. As described above there was significant day to day variation in particle concentration. This may be related to the fat content of the meat, which has been identified as a key factor in particle formation by cooking. Further research in which fat content of the food being cooked is systematically varied would useful.

Acknowledgment

This research is supported by University of Minnesota. We thank our colleagues from the Department of Civil, Environmental, and Geo- Engineering and the Department of Mechanical Engineering, especially Mugurel Turos and Bernard Olson.

References

[1] Jones AP. Indoor air quality and health. Atmospheric environment. 1999 Dec 1;33(28):4535-64.

[2] World Health Organization. WHO guidelines for indoor air quality: selected pollutants.

[3] McCormack MC, Breysse PN, Hansel NN, Matsui EC, Tonorezos ES, Curtin-Brosnan J, D'ann LW, Buckley TJ, Eggleston PA, Diette GB. Common household activities are associated with elevated particulate matter concentrations in bedrooms of inner-city Baltimore pre-school children. Environmental research. 2008 Feb 1;106(2):148-55.B. Smith, "An approach to graphs of linear forms (Unpublished work style)," unpublished.

[4] EPA G. Buildings and the Environment: A Statistical Summary Compiled by: US Environmental Protection Agency GB Workgroup. Environmental Protection Agency Green Building, Washington, DC. Available at: www. epa. gov/greenbuilding/pubs/gbstats. pdf (accessed 2 October 2008). 2004.

[5] Chan AT, Chung MW. Indoor–outdoor air quality relationships in vehicle: effect of driving environment and ventilation modes. Atmospheric Environment. 2003 Sep 1;37(27):3795-808.

[6] Kim KH, Pandey SK, Kabir E, Susaya J, Brown RJ. The modern paradox of unregulated cooking activities and indoor air quality. Journal of Hazardous materials. 2011 Nov 15; 195:1-0.

[7] Volkmer RE, Ruffin RE, Wigg NR, Davies N. The prevalence of respiratory symptoms in South Australian preschool children. II. Factors associated with indoor air quality. Journal of paediatrics and child health. 1995 Apr;31(2):116-20.

[8] Bruce N, Perez-Padilla R, Albalak R. Indoor air pollution in developing countries: a major environmental and public health challenge. Bulletin of the World Health organization. 2000; 78:1078-92.

[9] Lodhi MA, Zain-al-Abdin A. Indoor air pollutants produced from fossil fuel and biomass. Energy conversion and management. 1999 Feb 1;40(3):243-8.

[10] Khalequzzaman M, Kamijima M, Sakai K, Hoque BA, Nakajima T. Indoor air pollution and the health of children in biomass-and fossil-fuel users of Bangladesh: situation in two different seasons. Environmental health and preventive medicine. 2010 Jul;15(4):236.

[11] Kumar R, Nagar JK, Raj N, Kumar P, Kushwah AS, Meena M, Gaur SN. Impact of domestic air pollution from cooking fuel on respiratory allergies in children in India. Asian Pacific Journal of Allergy and Immunology. 2008 Dec 1;26(4):213.

[12] Ko YC, Lin TH. Emissions and efficiency of a domestic gas stove burning natural gases with various compositions. Energy Conversion and Management. 2003 Nov 1;44(19):3001-14.

[13] Pantangi VK, Mishra SC, Muthukumar P, Reddy R. Studies on porous radiant burners for LPG (liquefied petroleum gas) cooking applications. Energy. 2011 Oct 1;36(10):6074-80.

[14] See SW, Balasubramanian R. Physical characteristics of ultrafine particles emitted from different gas cooking methods. Aerosol Air Qual. Res.. 2006 Mar 1;6(1):82-92.

[15] Lee SC, Li WM, Chan LY. Indoor air quality at restaurants with different styles of cooking in metropolitan Hong Kong. Science of the Total Environment. 2001 Nov 12;279(1-3):181-93.

[16] O'Leary C, Kluizenaar Y, Jacobs P, Borsboom W, Hall I, Jones B. Investigating measurements of fine particle (pm2. 5) emissions from the cooking of meals and mitigating exposure using a cooker hood. Indoor air. 2019 Feb 4.

[17] Ignatius TS, Chiu YL, Au JS, Wong TW, Tang JL. Dose-response relationship between cooking fumes exposures and lung cancer among Chinese nonsmoking women. Cancer research. 2006 May 1;66(9):4961-7.

[18] Jaimini U, Banerjee T, Romine W, Thirunarayan K, Sheth A, Kalra M. Investigation of an indoor air quality sensor for asthma management in children. IEEE sensors letters. 2017 Apr;1(2):1-4.

[19] California Environmental Protection Agency. Residential Cooking Exposure Study Finds Unhealthful Levels. 2001

[20] Zhou Y, Li C, Huijbregts MA, Mumtaz MM. Carcinogenic air toxics exposure and their cancer-related health impacts in the United States. PloS one. 2015 Oct 7;10(10):e0140013.

[21] Seaton A, Godden D, MacNee W, Donaldson K. Particulate air pollution and acute health effects. The lancet. 1995 Jan 21;345(8943):176-8.

[22] Chen TM, Kuschner WG, Gokhale J, Shofer S. Outdoor air pollution: nitrogen dioxide, sulfur dioxide, and carbon monoxide health effects. The American journal of the medical sciences. 2007 Apr 1;333(4):249-56.

[23] Barnett AG, Williams GM, Schwartz J, Neller AH, Best TL, Petroeschevsky AL, Simpson RW. Air pollution and child respiratory health: a case-crossover study in Australia and New Zealand. American journal of respiratory and critical care medicine. 2005 Jun 1;171(11):1272-8.

[24] Touloumi G, Katsouyanni K, Zmirou D, Schwartz J, Spix C, Ponce de Leon A, Tobias A, Quennel P, Rabczenko D, Bacharova L, Bisanti L. Short-term effects of ambient oxidant exposure on mortality: a combined analysis within the APHEA project. American journal of epidemiology. 1997 Jul 15;146(2):177-85.

[25] Kang K, Kim H, Kim DD, Lee YG, Kim T. Characteristics of cooking-generated PM10 and PM2. 5 in residential buildings with different cooking and ventilation types. Science of The Total Environment. 2019 Feb 21.

[26] Sundell J. On the history of indoor air quality and health. Indoor air. 2004 Aug 1;14(s 7):51-8.

[27] Li A, Zhao Y, Jiang D, Hou X. Measurement of temperature, relative humidity, concentration distribution and flow field in four typical Chinese commercial kitchens. Building and Environment. 2012 Oct 1; 56:139-50.

[28] Schneider P, Castell N, Vogt M, Dauge FR, Lahoz WA, Bartonova A. Mapping urban air quality in near real-time using observations from low-cost sensors and model information. Environment international. 2017 Sep 1; 106:234-47.

[29] Rai AC, Kumar P, Pilla F, Skouloudis AN, Di Sabatino S, Ratti C, Yasar A, Rickerby D. End-user perspective of low-cost sensors for outdoor air pollution monitoring. Science of The Total Environment. 2017 Dec 31; 607:691-705.

[30] Castell N, Dauge FR, Schneider P, Vogt M, Lerner U, Fishbain B, Broday D, Bartonova A. Can commercial low-cost sensor platforms contribute to air quality monitoring and exposure estimates? . Environment international. 2017 Feb 1; 99:293-302.

[31] Cross ES, Williams LR, Lewis DK, Magoon GR, Onasch TB, Kaminsky ML, Worsnop DR, Jayne JT. Use of electrochemical sensors for measurement of air pollution: Correcting interference response and validating measurements. Atmospheric Measurement Techniques. 2017 Sep 29;10(9):3575-88.

[32] Hagan DH, Isaacman-VanWertz G, Franklin JP, Wallace LM, Kocar BD, Heald CL, Kroll JH. Calibration and assessment of electrochemical air quality sensors by co-location with regulatory-grade instruments.

[33] Afshar-Mohajer N, Zuidema C, Sousan S, Hallett L, Tatum M, Rule AM, Thomas G, Peters TM, Koehler K. Evaluation of low-cost electro-chemical sensors for environmental monitoring of ozone, nitrogen dioxide, and carbon monoxide. Journal of occupational and environmental hygiene. 2018 Feb 1;15(2):87-98.

[34] Mijling B, Jiang Q, de Jonge D, Bocconi S. Practical field calibration of electrochemical NO2 sensors for urban air quality applications. 2017

[35] Spinelle L, Gerboles M, Villani MG, Aleixandre M, Bonavitacola F. Field calibration of a cluster of low-cost available sensors for air quality monitoring. Part A: Ozone and nitrogen dioxide. Sensors and Actuators B: Chemical. 2015 Aug 1; 215:249-57.

[36] Alphasense http://www.alphasense.com/WEB1213/wp-content/uploads/2013/07/AAN_104.pdf , Last Access: 16 October 2018.

[37] Baron R, Saffell J. Amperometric gas sensors as a low cost emerging technology platform for air quality monitoring applications: A review. ACS sensors. 2017 Oct 26;2(11):1553-66.

[38] Alphasense Individual Sensor Board (ISB) Alphasense B4 4-Electrode Gas Sensor. 2016

[39] Yoctopuce. Available online: http://www.yoctopuce.com/EN/products/usb-environmental-sensors/yocto-co2 (accessed on 18 October 2018).

[40] Yoctopuce. Available online: http://www.yoctopuce.com/projects/yoctoCO2/YCO2MK01.usermanual-EN.pdf (accessed on 18 October 2018).

[41] Hussain H, Kim J, Yi S. Characteristics and Temperature Compensation of Non-Dispersive Infrared (NDIR) Alcohol Gas Sensors According to Incident Light Intensity. Sensors. 2018 Sep;18(9):2911.

[42] Esfahani S, Covington JA. Low cost optical electronic nose for biomedical applications. In Multidisciplinary Digital Publishing Institute Proceedings 2017 (Vol. 1, No. 4, p. 589).

[43] Todea AM, Beckmann S, Kaminski H, Asbach C. Accuracy of electrical aerosol sensors measuring lung deposited surface area concentrations. Journal of Aerosol Science. 2015 Nov 1; 89:96-109.

[44] Geiss O, Bianchi I, Barrero-Moreno J. Lung-deposited surface area concentration measurements in selected occupational and non-occupational environments. Journal of Aerosol Science. 2016 Jun 1; 96:24-37.

[45] Partector. Available online: http://www.naneos.ch/partector.html (accessed on 24 October 2018).

[46] SidePak Personal Aerosol Monitor AM510. https://www.tsi.com/discontinued-products/sidepak-personal-aerosol-monitor-am510/ (accessed on 9 May 2019).

[47] Jiang RT, Acevedo-Bolton V, Cheng KC, Klepeis NE, Ott WR, Hildemann LM. Determination of response of real-time SidePak AM510 monitor to secondhand smoke, other common indoor aerosols, and outdoor aerosol. Journal of environmental monitoring. 2011;13(6):1695-702.

[48] Christiani DC. Association between fine particulate matter and oxidative DNA damage may be modified in individuals with hypertension. Journal of occupational and environmental medicine/American College of Occupational and Environmental Medicine. 2009 Oct;51(10):1158.

[49] Thorpe A, Walsh PT. Direct-Reading Inhalable Dust Monitoring—An Assessment of Current Measurement Methods. Annals of occupational hygiene. 2013 May 23;57(7):824-41.

[50] Lai AC, Nazaroff WW. Modeling indoor particle deposition from turbulent flow onto smooth surfaces. Journal of aerosol science. 2000 Apr 1;31(4):463-76.
[51] Hinds WC. Aerosol technology: properties, behavior, and measurement of airborne particles. John Wiley & Sons; 1999 Jan 19.
[52] Buonanno G, Morawska L, Stabile L. Particle emission factors during cooking activities. Atmospheric Environment. 2009 Jun 1;43(20):3235-42.
[53] Yeung LL, To WM. Size distributions of the aerosols emitted from commercial cooking processes. Indoor and built environment. 2008 Jun;17(3):220-9.
[54] Hussein T, Glytsos T, Ondráček J, Dohányosová P, Ždímal V, Hämeri K, Lazaridis M, Smolík J, Kulmala M. Particle size characterization and emission rates during indoor activities in a house. Atmospheric Environment. 2006 Jul 1;40(23):4285-307.
[55] Geiss O, Bianchi I, Barrero-Moreno J. Lung-deposited surface area concentration measurements in selected occupational and non-occupational environments. Journal of Aerosol Science. 2016 Jun 1; 96:24-37.
[56] Reche C, Viana M, Brines M, Pérez N, Beddows D, Alastuey A, Querol X. Determinants of aerosol lung-deposited surface area variation in an urban environment. Science of The Total Environment. 2015 Jun 1; 517:38-47.
[57] Eeftens M, Phuleria HC, Meier R, Aguilera I, Corradi E, Davey M, Ducret-Stich R, Fierz M, Gehrig R, Ineichen A, Keidel D. Spatial and temporal variability of ultrafine particles, NO2, PM2. 5, PM2. 5 absorbance, PM10 and PMcoarse in Swiss study areas. Atmospheric environment. 2015 Jun 1; 111:60-70.
[58] Gomes JF, Bordado JC, Albuquerque PC. On the assessment of exposure to airborne ultrafine particles in urban environments. Journal of Toxicology and Environmental Health, Part A. 2012 Nov 16;75(22-23):1316-29.
[59] AirNow https://www.airnowtech.org/data/index.cfm, Access April-May 2019.
[60] Franco A, Leccese F, Marchi L. Occupancy modelling of buildings based on CO2 concentration measurements: an experimental analysis. In36th UIT Heat Transfer Conference 2018 (pp. 1-10). ITA.

Andres Gonzalez. PhD student in Department of Civil, Environmental, and Geo- Engineering at the University of Minnesota working with Dr. David Kittelson. The primary research interest is new technologies to measure air pollution in cities using mobile sources. Before coming to the University of Minnesota, I spent several years as consultant for the United Nations, Chilean Government, and NGOs among other institutions in the environmental area. Received bachelors in Business Administration from UDP, Chile and then earned a Master in Environmental Engineering from Institut Quimic de Sarria, Spain, a postgraduate degree in Environmental Pollution from the Universidad de Chile and Master in Environmental Management from Yale University. I have taught economics, environmental economics, and environmental management in undergraduate and graduate programs for more than 10 years.

Adam Boies. Received his BS and MS degrees in Mechanical Engineering from Missouri Science and Technology and his Ph.D. in Mechanical Engineering from the University of Minnesota. He started his faculty career as a lecturer at the University of Cambridge in 2011. Since then he has been held positions at the University of Minnesota as an Assistant Professor (2015-2017) and as a Reader at the University of Cambridge (2017-Present). He has been appointed as Fellow and Tutor at Trinity College Cambridge (2012-Present). He serves as Research Director for Catalytic Instruments, GmbH, and as a co-founder of Echion Technologies. His research focuses on characterizing the evolution, dynamics and impacts of gas-phase nanoparticles (e.g. soot) and gaseous pollutants. The applications of his research extend to air quality, transportation emissions and engineered nanoparticles for energy applications. His laboratory activities seek to understand aerosol phenomena within complex reacting flows in order to synthesize unique nanomaterial structures.

Jacob Swanson. Dr. Jacob Swanson is an Assistant Professor of Engineering in the Twin Cities Engineering Program in the Department of Integrated Engineering at Minnesota State University Mankato. He is also an Adjunct Assistant Professor in the Department of Mechanical Engineering (ME) at the University of Minnesota. He was previously a Research Associate in the Department of Engineering at the University of Cambridge, UK and before that, a graduate of UMN's ME Department. Prof. Swanson is internationally recognized for his work on emissions from engine combustion engines, especially as they related to fuels (including biofuels), lubricating oil, and emission control systems. He has published 34 papers and given more than 80 conference presentations on these topics.

David Kittelson. He has worked for more than 45 years on improving performance and reducing emissions from engines. Current research interests include sampling and characterization of ultrafine and nanoparticles from engines, development of new methods for measuring solid particles, measurement of vehicle emissions using mobile platforms, measurement of performance and emissions of engines operating in advanced low temperature combustion modes, measurement of particles from aircraft engines, development of advanced engine exhaust aftertreatment systems, reducing fuel use and greenhouse emissions from transportation, and production and use of biofuels including biodiesel, butanol, DME, Fischer-Tropsch liquids, ethanol, and biocrudes. He is a Fellow of the Society of Automotive Engineers.