World Academy of Science, Engineering and Technology
International Journal of Mechanical and Mechatronics Engineering
Vol:10, No:12, 2016

A Transfer Function Representation of Thermo-Acoustic Dynamics for Combustors

Myunggon Yoon, Jung-Ho Moon

***Abstract*—**In this paper, we present a transfer function representation of a general one-dimensional combustor. The input of the transfer function is a heat rate perturbation of a burner and the output is a flow velocity perturbation at the burner. This paper considers a general combustor model composed of multiple cans with different cross sectional areas, along with a non-zero flow rate.

***Keywords*—**Thermoacoustics, dynamics, combustor, transfer function.

I. Introduction

An appropriate modeling of thermo-acoustic behaviors of a combustor is a critical for a prediction and prevention of the combustion instability. The combustion instability is a self-excited thermal and/or mechanical oscillation of a combustor system, which is caused by a dynamic interplay between a heat rate perturbation and velocity perturbation ; (i) a heat rate perturbation of a burner can cause an acoustic velocity perturbation and (ii) conversely, a velocity perturbation in return makes a heat rate perturbation of a burner. A positive feedback among those two dynamics is a source of a combustion instability.

The second *velocity-to-heat* dynamics commonly described as a flame transfer function, is usually obtained from experiments. The first *heat-to-velocity* dynamics, we call it an *acoustic transfer function*, is very hard to be precisely found. This is because the combustor is a distributed parameter system and thus its thermal and acoustic behaviors are characterized by a set of coupled nonlinear partial differential equations (PDE's) in the fields of fluid dynamics and acoustics. In order to circumvent those complications, a one-dimensional acoustic model of a combustor is widely adopted in literature. A good reference for this topic can be found in [1].

This paper presents a step-by-step procedure for a derivation of an acoustic transfer function. In principle we adopt existing approaches in literature such as [2]-[5] but we also make some generalizations for combustors composed of multiple cans with different areas.

II. Acoustic Model

A. Wave Model

In this section, we consider a one-dimensional combustor model composed of two cans (different cross sectional areas) as shown in Fig. 1. The pressure and velocity perturbations in two sections have the following representations $(k = i, i+1)$;

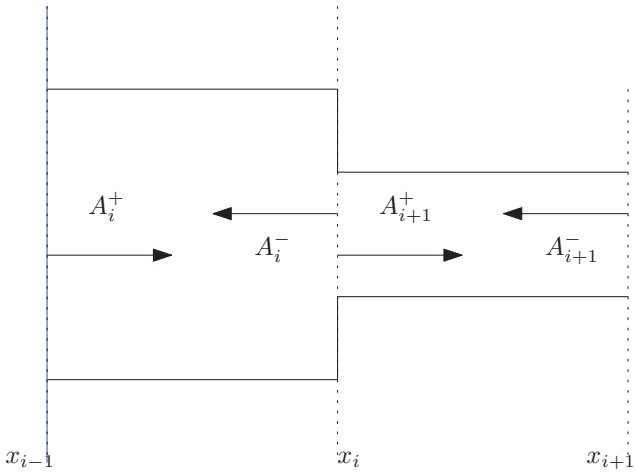

Fig. 1 Combustor with two cans

$$
\begin{aligned}
&p_k(x,t) - \overline{p}_k := p_k'(x,t) \\
&\quad = A_k^+\left(t - \frac{x - x_{k-1}}{\overline{c}_k + \overline{u}_k}\right) + A_k^-\left(t - \frac{x_k - x}{\overline{c}_k - \overline{u}_k}\right) \\
&u_k(x,t) - \overline{u}_k := u_k'(x,t) \\
&\quad = \frac{1}{\overline{\rho}_k \overline{c}_k}\left[A_k^+\left(t - \frac{x - x_{k-1}}{\overline{c}_k + \overline{u}_k}\right) + A_k^-\left(t - \frac{x_k - x}{\overline{c}_k - \overline{u}_k}\right)\right] \\
&\rho_i(x,t) - \overline{\rho}_i := \rho_k'(x,t) \\
&\quad = \frac{1}{\overline{c}_i^2}\left[A_i^+\left(t - \frac{x - x_{i-1}}{\overline{c}_i + \overline{u}_i}\right) + A_i^-\left(t - \frac{x_i - x}{\overline{c}_i - \overline{u}_i}\right)\right]
\end{aligned} \tag{1}
$$

where p_k, u_k, ρ_k, c_k denote the pressure, velocity, density, sound speed of the interval $x \in (x_{k-1}, x_k)$. In addition the overbar symbol denotes mean value and $A_k^{\pm}(x,t)$ are unknown functions.

Choosing $x = x_i$ and applying the Laplace transformation to (1), we have

$$
\begin{aligned}
\widetilde{p_k'}(s) &= \widetilde{A}_k^+ e^{-\tau_k^+ s} + \widetilde{A}_k^- \\
\overline{\rho}_k \overline{c}_k \widetilde{u_k'}(s) &= \widetilde{A}_k^+ e^{-\tau_k^+ s} - \widetilde{A}_k^- \\
\overline{c}_i^2 \widetilde{\rho_i'}(s) &= \widetilde{A}_i^+ e^{-\tau_i^+ s} + \widetilde{A}_i^- \\
\tau_k^{\pm} &:= \frac{x_k - x_{k-1}}{\overline{c}_k \pm \overline{u}_k} \quad (k = i, i+1)
\end{aligned} \tag{2}
$$

where the symbol ˜ represents the Laplace transform and $s \in \mathbb{C}$ is a complex Laplace variable.

M. Yoon is with the Department of Precision Mechanical Engineering, Gangneung-Wonju National University, Wonju, Rep. of Korea (e-mail: mgyoon@gwnu.ac.kr).
J. Moon is with the Department of Electrical Engineering, Gangneung-Wonju National University, Gangneung, Rep. of Korea.

B. Governing Equations

We wish to find relations between four wave functions $A_k^{\pm}(x_i,t)$ $(k=i,i+1)$ across at $x=x_i$ in Fig. 1. The relations come from the following three (mass, momentum and energy) conservations laws

$$\begin{aligned}[\rho u\mathcal{A}]_1^2 &= 0,\\ \left[(p+\rho u^2)\mathcal{A}\right]_1^2 &= 0,\\ \left[(\eta p u+\rho u^3/2)\mathcal{A}\right]_1^2 &= \dot{q}_i, \quad \eta := \frac{\gamma}{\gamma-1}\end{aligned} \tag{3}$$

where the subscript/superscript $\{1,2\}$ denote $\{x_i-\epsilon, x_i+\epsilon\}$ for small $\epsilon>0$. $\mathcal{A}_i$ denotes the cross-sectional areaes of the interval $x\in(x_{i-1},x_i)$ and $\dot{q}_i'$ denotes a heat rate perturbation at the point $x=x_i$ in Fig. 1.

Explicitly, (3) can be written as

$$\begin{aligned}\alpha_i\rho_2u_2 &= \rho_1u_1,\\ \alpha_i(p_2+\rho_2u_2^2) &= p_1+\rho_1u_1^2,\\ \alpha_i(\eta_2p_2u_2+\rho_2u_2^3/2) &= \eta_1p_1u_1+\rho_1u_1^3/2+\dot{q}_i/\mathcal{A}_1,\\ \alpha_i &:= \mathcal{A}_{i+1}/\mathcal{A}_i\end{aligned} \tag{4}$$

where, for notational simplicity, we mixed subscripts $\{1,2\}$ with $\{i,i+1\}$.

We will use the mass and energy conservation laws as given in (4) but for the momentum conservation, a modification is to be made as will be explained in the following sections.

1) Mass Conservation: The mass conservation law in (4) gives a conservation condition at an equilibrium state

$$\alpha_i\overline{\rho}_2\overline{u}_2=\overline{\rho}_1\overline{u}_1 \tag{5}$$

and its perturbed form

$$\alpha_i\rho_2'\overline{u}_2=\rho_1'\overline{u}_1+\overline{\rho}_1u_1'-\alpha_i\overline{\rho}_2u_2' \tag{6}$$

which can be rewritten as

$$\overline{u}_2^2\rho_2'=\frac{\overline{u}_1\overline{u}_2}{\alpha_i}\rho_1'+\frac{\overline{\rho}_1\overline{u}_2}{\alpha_i}u_1'-\overline{\rho}_2\overline{u}_2u_2' \tag{7}$$

The equillibrium and perforbation forms (5) and (6) will be merged into the momentum and energy conservation laws below.

2) Momentum Equation: Note that, under the next conditions

$$\mathcal{A}_1\neq\mathcal{A}_2 \text{ (or } \alpha_i\neq 1), \quad u_1\approx 0, \quad u_2\approx 0, \tag{8}$$

the momentum conservation law (4) gives rise to a discontinuity $p_1'(x_1,t)\neq p_2'(x_1,t)$ at the flame, which is not physically intuitive. For a resolution of this, while keeping the momentum conservation law alive as much as possible, one may consider a simple modification

$$p_2+\rho_2u_2^2=p_1+\rho_1u_1^2/\alpha_i \tag{9}$$

instead of the previous form in (4). This new law says that the momentum is not conserved but either increased if $\alpha_i>1$ or decreased if $\alpha_i<1$. A physical justification of the new momentum law (9) is accredited to axial forces at $x=x_i$ in [5]. A perturbed of (9) is given as

$$p_2'+\rho_2'\overline{u}_2^2+2\overline{\rho}_2\overline{u}_2u_2'=p_1'+\frac{\overline{u}_1^2\rho_1'+2\overline{\rho}_1\overline{u}_1u_1'}{\alpha_i} \tag{10}$$

By combining this result with the mass equation (7), we can obtain

$$\begin{aligned}0=p_2'-p_1'+\overline{\rho}_2\overline{c}_2u_2'M_2+\frac{\overline{u}_1}{\overline{c}_1^2\alpha_i}\left(\overline{u}_2-\overline{u}_1\right)\overline{c}_1^2\rho_1'\\ +\frac{\overline{\rho}_1}{\overline{\rho}_1\overline{c}_1\alpha_i}\left(\overline{u}_2-2\overline{u}_1\right)\overline{\rho}_1\overline{c}_1u_1'\end{aligned} \tag{11}$$

From the representation (10), perturbation form (2) and next two identities ;

$$\begin{aligned}&\text{(i)} \quad \frac{\overline{u}_1(\overline{u}_2-\overline{u}_1)}{\overline{c}_1^2\alpha_i}=\frac{\overline{u}_1^2(\overline{u}_2/\overline{u}_1-1)}{\overline{c}_1^2\alpha_i}=\frac{M_1^2}{\alpha_i}\left(\frac{\overline{u}_2}{\overline{u}_1}-1\right),\\ &\text{(ii)} \quad \frac{(\overline{u}_2-2\overline{u}_1)}{\overline{c}_1\alpha_i}=\frac{\overline{u}_1}{\overline{c}_1\alpha_i}\left(\frac{\overline{u}_2}{\overline{u}_1}-2\right)=\frac{M_1}{\alpha_i}\left(\frac{\overline{u}_2}{\overline{u}_1}-2\right)\\ &\text{(iii)} \quad -\alpha_i+M_1^2\left(\frac{\overline{u}_2}{\overline{u}_1}-1\right)\pm M_1\left(\frac{\overline{u}_2}{\overline{u}_1}-2\right)\\ &\qquad =-\alpha_i\mp M_1+M_1(M_1\pm 1)\left(\frac{\overline{u}_2}{\overline{u}_1}-1\right)\end{aligned}$$

where $M_k:=\overline{u}_k/\overline{c}_k$, one can obtain that

$$\begin{aligned}&\left[-\alpha_i-M_1+M_1(M_1+1)\left(\frac{\overline{u}_2}{\overline{u}_1}-1\right)\right]\widetilde{A}_i^+e^{-\tau_i^+s}\\ &+\left[-\alpha_i+M_1+M_1(M_1-1)\left(\frac{\overline{u}_2}{\overline{u}_1}-1\right)\right]\widetilde{A}_i^-\\ &+\alpha_i\left(1+M_2\right)\widetilde{A}_{i+1}^+\\ &+\alpha_i\left(1-M_2\right)\widetilde{A}_{i+1}^-e^{-\tau_{i+1}^-s}=0\end{aligned} \tag{12}$$

3) Energy Conservation: A perturbation form of the energy conservation law (4) is given as

$$\begin{aligned}&\alpha_i\eta_2\overline{u}_2p_2'+\alpha_i\eta_2\overline{p}_2u_2'+\frac{\overline{u}_2^3}{2}\alpha_i\rho_2'+\frac{3}{2}\alpha_i\overline{\rho}_2\overline{u}_2^2u_2'\\ &-\eta_1\overline{p}_1u_1'-\eta_1\overline{u}_1p_1'-\frac{\overline{u}_1^3}{2}\rho_1'-\frac{3\overline{\rho}_1\overline{u}_1^2}{2}u_1'=\widetilde{q}'_i(s)/\mathcal{A}_i\end{aligned} \tag{13}$$

where $\widetilde{q}'_i(s)$ denotes the Laplace transform of the heat rate perturbation $\dot{q}'(x_i,t)$.

From (7), one can rewrite

$$\begin{aligned}\widetilde{q}'_i(s)/\mathcal{A}_i &= \alpha_i\eta_2\overline{u}_2p_2'-\eta_1\overline{u}_1p_1'\\ &+\frac{\alpha_i}{\overline{\rho}_2\overline{c}_2}\left(\eta_2\overline{p}_2-\frac{\overline{u}_2^2}{2}\overline{\rho}_2+\frac{3\overline{\rho}_2\overline{u}_2^2}{2}\right)\overline{\rho}_2\overline{c}_2u_2'\\ &+\frac{\overline{u}_1}{2\overline{c}_1^2}\left(\overline{u}_2^2-\overline{u}_1^2\right)\overline{c}_1^2\rho_1'\\ &-\frac{1}{\overline{\rho}_1\overline{c}_1}\left(\eta_1\overline{p}_1-\frac{\overline{u}_2^2}{2}\overline{\rho}_1+\frac{3\overline{\rho}_1\overline{u}_1^2}{2}\right)\overline{\rho}_1\overline{c}_1u_1'\end{aligned} \tag{14}$$

Now, making uses of the next facts [6], (p.35).

$$\overline{p}_1=\frac{1}{\gamma_1}\overline{\rho}_1\overline{c}_1^2, \quad \overline{p}_2=\frac{1}{\gamma_2}\overline{\rho}_2\overline{c}_2^2, \tag{15}$$

one can easily derive the following identities

$$\text{(i)}\quad \alpha_i\eta_2\overline{u}_2 = \alpha_i\overline{c}_2\frac{\gamma_2 M_2}{\gamma_2-1}$$

$$\text{(ii)}\quad \eta_1\overline{u}_1 = \overline{c}_1\frac{\gamma_1 M_1}{\gamma_1-1}$$

$$\text{(iii)}\quad \frac{\alpha_i}{\overline{\rho}_2\overline{c}_2}\left(\eta_2\overline{p}_2+\overline{\rho}_2\overline{u}_2^2\right) = \alpha_i\overline{c}_2\left(\frac{1}{\gamma_2-1}+M_2^2\right)$$

$$\text{(vi)}\quad \frac{\overline{u}_1}{2\overline{c}_1^2}\left(\overline{u}_2^2-\overline{u}_1^2\right) = \frac{\overline{c}_1 M_1^3}{2}\left(\frac{\overline{u}_2^2}{\overline{u}_1^2}-1\right)$$

$$\text{(v)}\quad \frac{1}{\overline{\rho}_1\overline{c}_1}\left(-\eta_1\overline{p}_1+\frac{\overline{u}_2^2}{2}\overline{\rho}_1-\frac{3\overline{\rho}_1\overline{u}_1^2}{2}\right) = \overline{c}_1\left[-\frac{1}{\gamma_1-1}+\frac{M_1^2}{2}\left(\frac{\overline{u}_2^2}{\overline{u}_1^2}-3\right)\right]$$

Making use of these identities and (14), we can obtain

$$\begin{aligned}
&\widetilde{\dot{q}}'_i(s)/\mathcal{A}_i = \\
&\overline{c}_1\left[-\frac{\gamma_1 M_1+1}{\gamma_1-1}+\frac{M_1^2}{2}(M_1+1)\left(\frac{\overline{u}_2^2}{\overline{u}_1^2}-1\right)-M_1^2\right]\widetilde{A}_i^+ e^{-\tau_i^+ s} \\
&+\overline{c}_1\left[-\frac{\gamma_1 M_1-1}{\gamma_1-1}+\frac{M_1^2}{2}(M_1-1)\left(\frac{\overline{u}_2^2}{\overline{u}_1^2}-1\right)+M_1^2\right]\widetilde{A}_i^- \\
&\qquad+\alpha_i\overline{c}_2\left[\frac{\gamma_2 M_2+1}{\gamma_2-1}+M_2^2\right]\widetilde{A}_{i+1}^+ \\
&\qquad+\alpha_i\overline{c}_2\left[\frac{\gamma_2 M_2-1}{\gamma_2-1}-M_2^2\right]\widetilde{A}_{i+1}^- e^{-\tau_{i+1}^- s}
\end{aligned} \tag{16}$$

C. Relations between Wave Functions

From now on we recover the subscript $\{i, i+1\}$ instead of $\{1, 2\}$ for notational consistency. Then, in a matrix form, the momentum and energy conditions can be written as

$$Q_i\begin{bmatrix}\widetilde{A}_i^+\\ \widetilde{A}_i^-\end{bmatrix}+D_i\begin{bmatrix}\widetilde{A}_{i+1}^+\\ \widetilde{A}_{i+1}^-\end{bmatrix}=\begin{bmatrix}0\\1\end{bmatrix}\frac{\widetilde{\dot{q}}'_i(s)}{\mathcal{A}_i} \tag{17}$$

where

$$Q_i := \begin{bmatrix} q_i^{(1,1)} & q_i^{(1,2)}\\ q_i^{(2,1)} & q_i^{(2,2)}\end{bmatrix}\begin{bmatrix} e^{-\tau_i^+ s} & 0\\ 0 & 1\end{bmatrix} \tag{18}$$

$$D_i := \begin{bmatrix} d_i^{(1,1)} & d_i^{(1,2)}\\ d_i^{(2,1)} & d_i^{(2,2)}\end{bmatrix}\begin{bmatrix} 1 & 0\\ 0 & e^{-\tau_{i+1}^- s}\end{bmatrix} \tag{19}$$

$$\begin{cases}
q_i^{(1,1)} &= -\alpha_i - M_i + M_i(1+M_i)\left(\overline{u}_{i+1}/\overline{u}_i - 1\right)\\
q_i^{(1,2)} &= -\alpha_i + M_i - M_i(1-M_i)\left(\overline{u}_{i+1}/\overline{u}_i - 1\right)\\
q_i^{(2,1)} &= \overline{c}_i\Big[-\frac{\gamma_i M_i+1}{\gamma_i-1}-M_i^2\\
&\qquad +\tfrac{1}{2}M_i^2(1+M_i)(\overline{u}_{i+1}^2/\overline{u}_i^2-1)\Big]\\
q_i^{(2,2)} &= \overline{c}_i\Big[-\frac{\gamma_i M_i-1}{\gamma_i-1}+M_i^2\\
&\qquad -\tfrac{1}{2}M_i^2(1-M_i)(\overline{u}_{i+1}^2/\overline{u}_i^2-1)\Big]\\
d_i^{(1,1)} &= \alpha_i(1+M_{i+1})\\
d_i^{(1,2)} &= \alpha_i(1-M_{i+1})\\
d_i^{(2,1)} &= \alpha_i\overline{c}_{i+1}\left[\frac{\gamma_{i+1}M_{i+1}+1}{\gamma_{i+1}-1}+M_{i+1}^2)\right]\\
d_i^{(2,2)} &= \alpha_i\overline{c}_{i+1}\left[\frac{\gamma_{i+1}M_{i+1}-1}{\gamma_{i+1}-1}+M_{i+1}^2)\right]
\end{cases} \tag{20}$$

We note that if the heat perturbation at $x = x_i$ satisfies $\dot{q}'_i = 0$ then (17) can be written as

$$\begin{bmatrix}\widetilde{A}_i^+\\ \widetilde{A}_i^-\end{bmatrix} = -Q_i^{-1}D_i\begin{bmatrix}\widetilde{A}_{i+1}^+\\ \widetilde{A}_{i+1}^-\end{bmatrix} \tag{21}$$

D. General One-Dimensional Model

Consider a general combustor composed of multiple area places as illustrated in Fig. 2. We assume that this combustor has only one hear source at $x = x_{n-1}$, that is,

$$\dot{q}'_k = 0 \quad (k = 1, \cdots, n-2), \quad \dot{q}'_{n-1} \neq 0 \tag{22}$$

This assumption is not essential but can be easily removed with slight modifications of the following results.

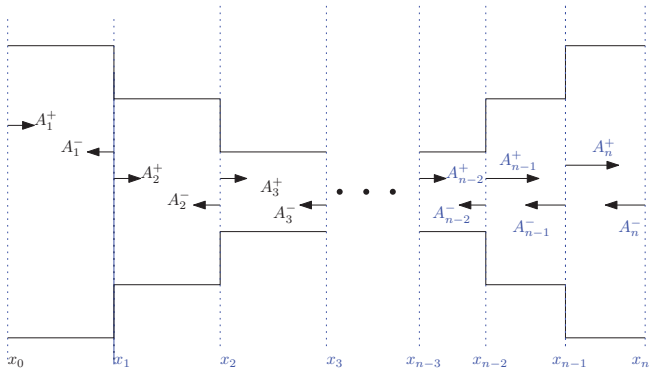

Fig. 2 Combustor with n-cans

It should be noted that we made no assumptions on the area ratios $\{\alpha_i\,;\, i = 1, \cdots, n\}$. The particular shape of the combustor in Fig. 2 whose cross sectional areas decrease firstly and then increases as n increases, is only an illustration and any general shape can be considered in our model to be developed below.

An application of the wave function relations (17) to $x = x_k$ for every $k = 1, \cdots, n-1$, gives ($k = 1, \cdots, n-2$)

$$\begin{aligned}
Q_k\begin{bmatrix}\widetilde{A}_k^+\\ \widetilde{A}_k^-\end{bmatrix}+D_k\begin{bmatrix}\widetilde{A}_{k+1}^+\\ \widetilde{A}_{k+1}^-\end{bmatrix}&=\begin{bmatrix}0\\0\end{bmatrix}\\
Q_{n-1}\begin{bmatrix}\widetilde{A}_{n-1}^+\\ \widetilde{A}_{n-1}^-\end{bmatrix}+D_{n-1}\begin{bmatrix}\widetilde{A}_n^+\\ \widetilde{A}_n^-\end{bmatrix}&=\begin{bmatrix}0\\1\end{bmatrix}\frac{\widetilde{\dot{q}}'_{n-1}(s)}{\mathcal{A}_{n-1}}
\end{aligned} \tag{23}$$

Now, from (21), we can eliminate $\widetilde{A}_k^{\pm}$ for $k = 2, \cdots, n-2$ in the recursive equation (23) to have

$$\begin{aligned}
Q_1\begin{bmatrix}\widetilde{A}_1^+\\ \widetilde{A}_1^-\end{bmatrix}+V\begin{bmatrix}\widetilde{A}_{n-1}^+\\ \widetilde{A}_{n-1}^-\end{bmatrix}&=\begin{bmatrix}0\\0\end{bmatrix}\\
Q_{n-1}\begin{bmatrix}\widetilde{A}_{n-1}^+\\ \widetilde{A}_{n-1}^-\end{bmatrix}+D_{n-1}\begin{bmatrix}\widetilde{A}_n^+\\ \widetilde{A}_n^-\end{bmatrix}&=\begin{bmatrix}0\\1\end{bmatrix}\frac{\widetilde{\dot{q}}'_{n-1}(s)}{\mathcal{A}_{n-1}}
\end{aligned} \tag{24}$$

where

$$\begin{aligned}
V &= \begin{bmatrix} v_{11} & v_{12}\\ v_{21} & v_{22}\end{bmatrix}\\
&:= D_1(-Q_2^{-1}D_2)(-Q_3^{-1}D_3)\cdots(-Q_{n-2}^{-1}D_{n-2})
\end{aligned} \tag{25}$$

Notice that (24) has six unknowns and four equalities. Two additional equalities come from the boundary conditions at $x \in \{x_0, x_n\}$. The boundary condition are generally characterized by the *reflection coefficients*

$$R_i(s) := \frac{\widetilde{A}_1^+}{\widetilde{A}_1^- e^{-\tau_1^- s}}, \quad R_o(s) := \frac{\widetilde{A}_n^-}{\widetilde{A}_n^+ e^{-\tau_n^- s}} \tag{26}$$

In general, the reflection coefficients $R_i(s), R_o(s)$ can be functions of the Laplace variable $s \in \mathbb{C}$ but we suppress their dependency on s for notational simplicity.

By substituting $\widetilde{A}_1^+ = R_i e^{-\tau_1^- s}\widetilde{A}_1^-$, $\widetilde{A}_n^- = R_o e^{-\tau_n^+ s}\widetilde{A}_n^+$ into (24), we obtain four equalities with four unknowns ;

$$\begin{bmatrix} k_1 \\ k_2 \end{bmatrix} \widetilde{A}_1^- + \begin{bmatrix} v_{11} & v_{12} \\ v_{21} & v_{22} \end{bmatrix} \begin{bmatrix} \widetilde{A}_{n-1}^+ \\ \widetilde{A}_{n-1}^- \end{bmatrix} = \begin{bmatrix} 0 \\ 0 \end{bmatrix}$$
$$\begin{bmatrix} q_{n-1}^{(1,1)} e^{-\tau_{n-1}^+ s} & q_{n-1}^{(1,2)} \\ q_{n-1}^{(2,1)} e^{-\tau_{n-1}^+ s} & q_{n-1}^{(2,2)} \end{bmatrix} \begin{bmatrix} \widetilde{A}_{n-1}^+ \\ \widetilde{A}_{n-1}^- \end{bmatrix} + \begin{bmatrix} h_1 \\ h_2 \end{bmatrix} \widetilde{A}_n^+ = \begin{bmatrix} 0 \\ 1 \end{bmatrix} \frac{\widetilde{\dot{q}'}_{n-1}(s)}{\mathcal{A}_{n-1}} \tag{27}$$

where

$$\begin{cases} k_1 := q_1^{(1,1)} R_i e^{-(\tau_1^+ + \tau_1^-)s} + q_1^{(1,2)} \\ k_2 := q_1^{(2,1)} R_i e^{-(\tau_1^+ + \tau_1^-)s} + q_1^{(2,2)} \\ h_1 := d_{n-1}^{(1,1)} + d_{n-1}^{(1,2)} R_o e^{-(\tau_n^+ + \tau_n^-)s} \\ h_2 := d_{n-1}^{(2,1)} + d_{n-1}^{(2,2)} R_o e^{-(\tau_n^+ + \tau_n^-)s} \end{cases} \tag{28}$$

In addition, an elimination of two unknowns $\widetilde{A}_1^-, \widetilde{A}_n^+$ in (27) gives

$$\mathcal{F}(s) \begin{bmatrix} \widetilde{A}_{n-1}^+ \\ \widetilde{A}_{n-1}^- \end{bmatrix} = -\begin{bmatrix} 0 \\ 1 \end{bmatrix} \frac{\widetilde{\dot{q}'}_{n-1}(s)}{\mathcal{A}_{n-1}} \tag{29}$$

where

$$\mathcal{F}(s) := \begin{bmatrix} k_2 v_{11} - k_1 v_{21} & k_2 v_{12} - k_1 v_{22} \\ \left(h_2 q_{n-1}^{(1,1)} - h_1 q_{n-1}^{(2,1)}\right) e^{-\tau_{n-1}^+ s} & h_2 q_{n-1}^{(1,2)} - h_1 q_{n-1}^{(2,2)} \end{bmatrix} \tag{30}$$

Define a matrix determinant $\Delta(s) := |\mathcal{F}(s)|$. Then (29) gives

$$\begin{bmatrix} \widetilde{A}_{n-1}^+ \\ \widetilde{A}_{n-1}^- \end{bmatrix} = \frac{1}{\Delta(s)} \begin{bmatrix} k_2 v_{12} - k_1 v_{22} \\ -k_2 v_{11} + k_1 v_{21} \end{bmatrix} \frac{\widetilde{\dot{q}'}_{n-1}(s)}{\mathcal{A}_{n-1}} \tag{31}$$

Note that, similar to (2), the velocity perturbation at $x = x_{n-1}$ is given

$$\overline{\rho}_{n-1}\overline{c}_{n-1}\widetilde{u'}_{n-1}(s) = \widetilde{A}_{n-1}^+ e^{-\tau_{n-1}^+ s} - \widetilde{A}_{n-1}^- \tag{32}$$

As a final step, from (31) and (32), we obtain a transfer function from the hear rate perturbation to the velocity perturbation given

$$\frac{\widetilde{u'}_{n-1}(s)}{\widetilde{\dot{q}'}_{n-1}(s)} = \left(\frac{1}{\overline{\rho}_{n-1}\overline{c}_{n-1}\mathcal{A}_{n-1}}\right) \times \frac{(k_2 v_{12} - k_1 v_{22}) e^{-\tau_{n-1}^+ s} + (k_2 v_{11} - k_1 v_{21})}{\Delta(s)} \tag{33}$$

III. Conclusion

We have derived a thermo-acoustic transfer function of a general one-dimensional combustor mode. Our transfer function representation can handle a general one-dimensional combustor model with multiple cans with different cross sectional areas, without assuming zero flow rate.

References

[1] S. W. Rienstra and A. Hirschberg, *An Introduction to Acoustics*. Eindhoven University of Technology, 2016.
[2] J. Li and A. S. Morgans, "Time domain simulations of nonlinear thermoacoustic behaviour in a simple combustor using a wave-based approach," *Journal of Sound and Vibration*, vol. 346, pp. 345–360, 2015.
[3] A. P. Dowling, "Nonlinear self-excited osillations of a ducted flame," *J. of Fluid Mech.*, vol. 346, pp. 271–290, 1997.
[4] J. Li, D. Yang, C. Luzzato, and A. S. Morgans, "Open source combustion instability low order simulator (osciloslong)," Imperial College, Tech. Rep.
[5] A. Dowling and S. Stow, "Acoustic analysis of gas turbine combustors," *Journal of Propulsion and Power*, vol. 19, pp. 751–764, 2003.
[6] F. Fahy, *Foundation of Engineering Acoustics*. San Diego, California: Elsevier Academic Press, 2009.