World Academy of Science, Engineering and Technology
International Journal of Mechanical and Mechatronics Engineering
Vol:9, No:6, 2015

Modeling and Control of an Acrobot Using MATLAB and Simulink

Dong Sang Yoo

***Abstract*—**The problem of finding control laws for underactuated systems has attracted growing attention since these systems are characterized by the fact that they have fewer actuators than the degrees of freedom to be controlled. The acrobot, which is a planar two-link robotic arm in the vertical plane with an actuator at the elbow but no actuator at the shoulder, is a representative in underactuated systems. In this paper, the dynamic model of the acrobot is implemented using Mathworks' Simscape. And the sliding mode control is constructed using MATLAB and Simulink.

***Keywords*—**Acrobot, MATLAB and Simulink, sliding mode control, underactuated systems.

I. Introduction

UNDERACTUATED mechanical systems have fewer control inputs than degrees of freedom (D.O.F) and arise in applications, such as space and undersea robots, mobile robots, walking, brachiating, and gymnastic robots. Since there are tight couplings between actuated and unactuated D.O.Fs in such systems, the control input cannot accelerate the state of the system in arbitrary directions. Consequently, underactuated mechanical systems cannot be commanded to follow arbitrary trajectories [1]. A mechanical system may be underactuated in several ways. The most obvious way is from intentional design as in the brachiation robot of Fukuda, the passive walker of McGeer, the acrobot, or the Pendubot [2]. The control of underactuated systems is an open and interesting problem in controls. Recently many control researchers have concerned such control problems for underactuated mechanical systems and several methods have been developed [3]-[5].

The acrobot, which is a representative in underactuated systems, is a planar two-link robotic arm in the vertical plane with an actuator at the elbow, but no actuator at the shoulder. In contrast, the pendubot has an actuator at the shoulder but not at the elbow [1], [2].

In this paper, the dynamic model of the acrobot is implemented using Mathworks' Simscape™. And the sliding mode control is constructed using MATLAB and Simulink.

II. Dynamic Model and Control

Consider the Lagrangian dynamics of an nth mechanical system.

This work was supported by the GRRC program of Gyeonggi province. (GRRC HANKYONG 2013-B02).

Dong Sang Yoo is with Department of Electrical, Electronic and Control Engineering, Hankyong National University, Anseong-si, Gyeonggi-do, 456-749 Korea (phone: +82-31-670-5322; fax: +82-31-670-5329; e-mail: dsyoo@hknu.ac.kr).

$$M(q)\ddot{q} + C(q,\dot{q})\dot{q} + g(q) = B(q)\tau \tag{1}$$

where $q \in R^n$ is the vector of generalized coordinates, $\tau \in R^m$ is the input generalized force ($m<n$), and $B(q) \in R^{n\times m}$ has full rank for all q.

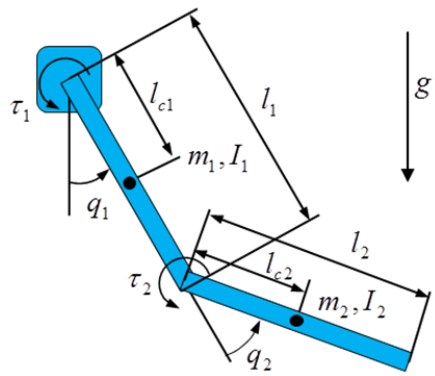

Fig. 1 Two-link robot

Now consider a two-link robot shown in Fig. 1. q_1 is the shoulder joint angle and q_2 is the elbow joint angle. The dynamic equation of the two link robot is as:

$$\begin{aligned}
&(I_1 + I_2 + m_2 l_1^2 + 2m_2 l_1 l_{c2} c_2)\ddot{q}_1 + (I_2 + m_2 l_1 l_{c2} c_2)\ddot{q}_2 \\
&\quad - m_2 l_1 l_{c2} s_2 \dot{q}_1 \dot{q}_2 - m_2 l_1 l_{c2} s_2 \dot{q}_2^2 + m_1 g l_{c1} s_1 \\
&\quad + m_2 g (l_1 s_1 + l_{c2} s_{1+2}) = \tau_1 \\
&(I_2 + m_2 l_1 l_{c2} c_2)\ddot{q}_1 + I_2 \ddot{q}_2 \ + m_2 l_1 l_{c2} s_2 \dot{q}_2^2 \\
&\quad + m_2 g l_{c2} s_{1+2} = \tau_2
\end{aligned} \tag{2}$$

where m_1 and m_2 are masses of link 1 and link 2, respectively. And $c_x = \cos\theta_x$, $s_x = \sin\theta_x$, and $s_{x+y} = \sin(\theta_x + \theta_y)$. If $\tau_1 = 0$ this system represents the acrobot, while if $\tau_2 = 0$ the system represents the pendubot [2].

In this paper, we used Mathworks' Simscape™ to model the acrobot dynamics described in (2). Simscape is a tool for modeling and simulating multidomain physical systems, such as those with mechanical, hydraulic, pneumatic, electrical, and electromagnetic components. Unlike other Simulink blocks, which represent mathematical operations or operate on signals, Simscape blocks represent physical components or relationships directly [6].

Conventional Simulink model and Simscape model of the acrobot are shown in Figs. 2 and 3, respectively. And the

acrobot parameters that we have chosen are summarized in Table I.

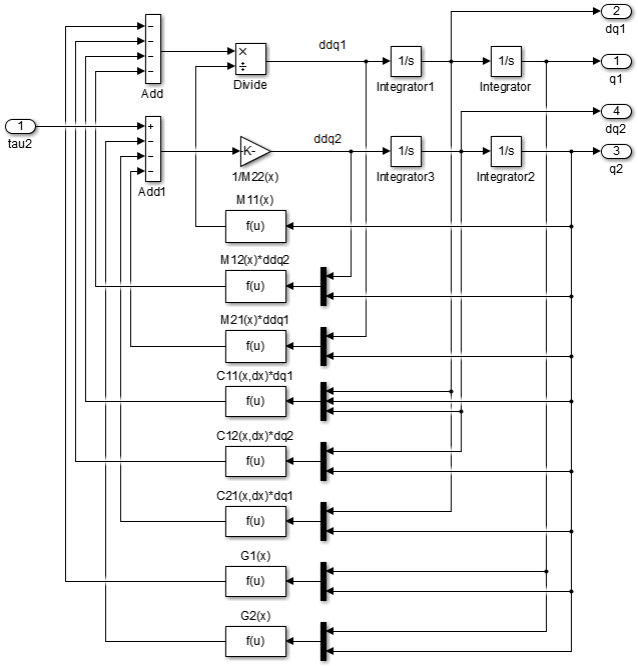

Fig. 2 Acrobot model using Simulink

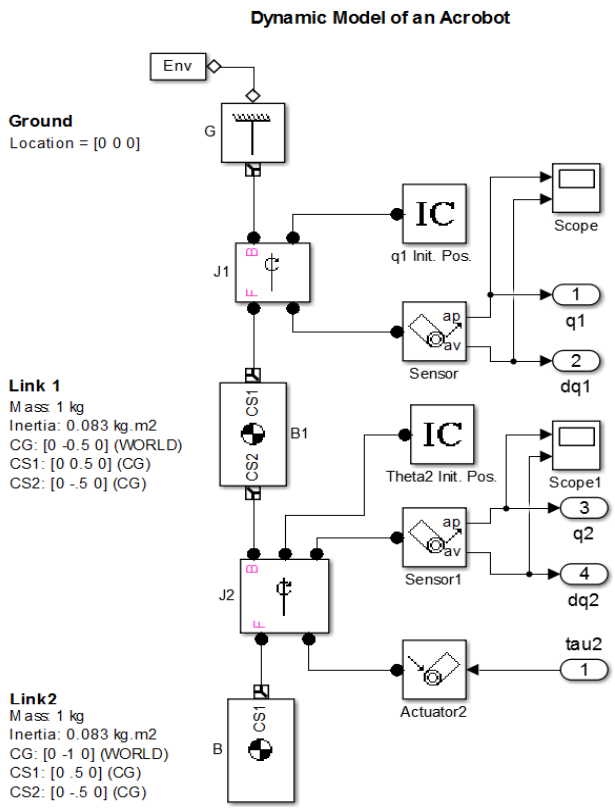

Fig. 3 Acrobot model using Simscape™

Similarly, we could easily build a pendubot model with parameters in Table I using Simscape as shown in Fig. 4.

TABLE I
ACROBOT MODEL PARAMETERS

Symbol	Description	Value
m_1	mass of link 1	1.0 kg
m_2	mass of link 2	1.0 kg
l_1	length of link 1	1.0 m
l_2	length of link 2	1.0 m
l_{c1}	center of mass of link 1	0.5 m
l_{c2}	center of mass of link 2	0.5 m
I_1	moment of inertia of link 1	0.083 kg·m^2
I_2	moment of inertia of link 2	0.083 kg·m^2

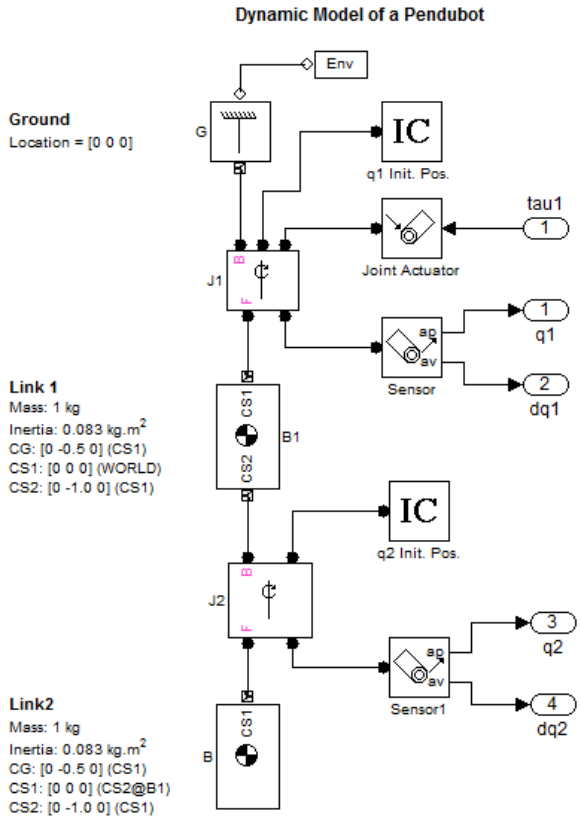

Fig. 4 Pendubot model using Simscape™

We chose an integral sliding function as:

$$\begin{bmatrix} s_1 \\ s_2 \end{bmatrix} = \begin{bmatrix} \dot{e}_1 \\ \dot{e}_2 \end{bmatrix} + \Lambda \begin{bmatrix} e_1 \\ e_2 \end{bmatrix} + \begin{bmatrix} z_1 \\ z_2 \end{bmatrix} \tag{3}$$

$$\begin{bmatrix} \dot{z}_1 \\ \dot{z}_2 \end{bmatrix} = \Gamma \left(\begin{bmatrix} \dot{e}_1 \\ \dot{e}_2 \end{bmatrix} + \Lambda \begin{bmatrix} e_1 \\ e_2 \end{bmatrix} \right) \tag{4}$$

$$\begin{bmatrix} z_1(0) \\ z_2(0) \end{bmatrix} = -\left(\begin{bmatrix} \dot{e}_1(0) \\ \dot{e}_2(0) \end{bmatrix} + \Lambda \begin{bmatrix} e_1(0) \\ e_2(0) \end{bmatrix} \right) \tag{5}$$

where $e_i = q_i - q_{id}$ for i=1, 2 and q_{id} is the desired angular position for link i. Γ and Λ are positive definite diagonal matrices. Simulink model for the integral sliding function is shown in Fig. 5.

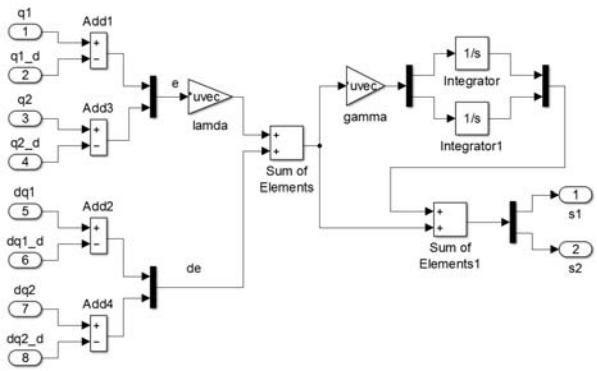

Fig. 5 Simulink model for a sliding function

Based on well-known parametric characteristics of the acrobot, we designed a sliding mode control as:

$$\tau_2 = K_2 s_2 - u_2 \tag{6}$$

$$u_2 = \frac{s_2}{|s_2| + \varepsilon}\rho_2 + \frac{s_2}{s_2^2 + \varepsilon}\left(\rho_1 |s_1 + K_1 s_1^2|\right) \tag{7}$$

where K_1 and K_2 are positive constant gains and ε is a small constant. ρ_1 and ρ_2 are the boundary values for nonlinearities/ uncertainties of link 1 and link 2, respectively. Figs. 6 & 7 show Simulink model for boundary of nonlinearities/uncertainties for the acrobot. Simulink model for the sliding mode control is shown in Fig. 8.

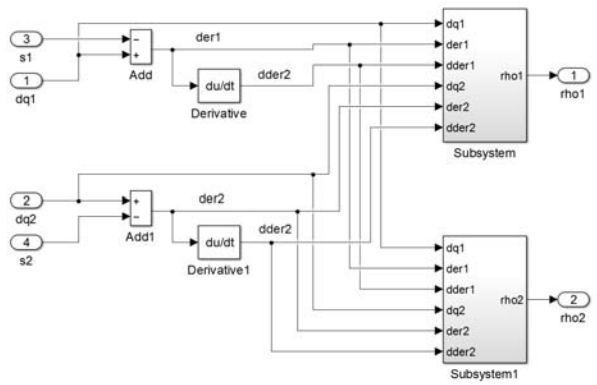

Fig. 6 Simulink model for boundary of nonlinearites

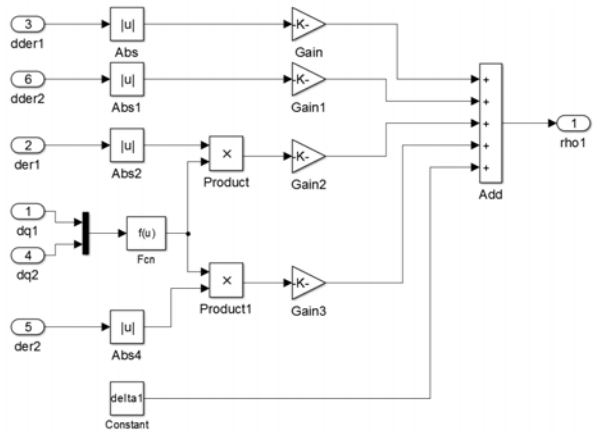

Fig. 7 Simulink detail model for ρ_1

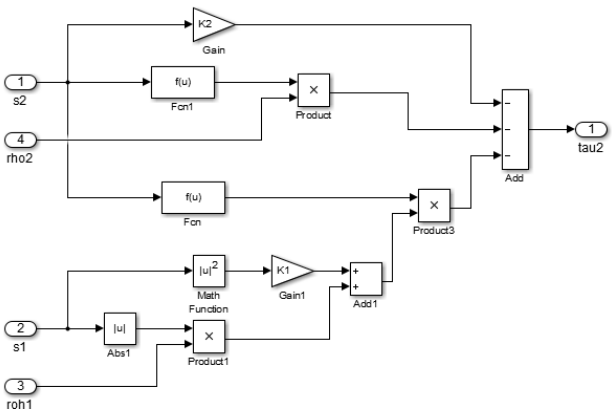

Fig. 8 Simulink model for sliding mode control

Simulink model for the whole system is shown in Fig. 9.

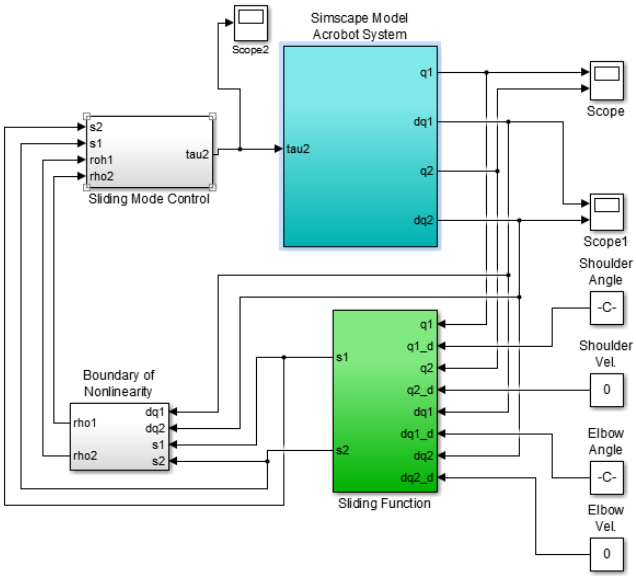

Fig. 9 Simulink model for the whole system

III. Simulation

For computer simulations, the acrobot parameters that we

have chosen are summarized in Table I. The illustrative example of the balancing task for the acrobot is as follows. The initial position is chosen as $(q_1, q_2) = (\pi/4, \pi/4)$ and the initial velocity and desired position of the robot are chosen as

$$\begin{aligned} &\dot{q}_1(0) = \dot{q}_2(0) = 0 \\ &q_{1d}(0) = 0,\ q_{2d}(0) = 0 \end{aligned} \tag{8}$$

The simulation result is presented in Fig. 9.

IV. Conclusion

In this paper, to model and control for the acrobot which is one of underactuated mechanical systems, we used Mathworks' Simulink/Simscape. And the controller using the sliding mode was constructed using Simulink.

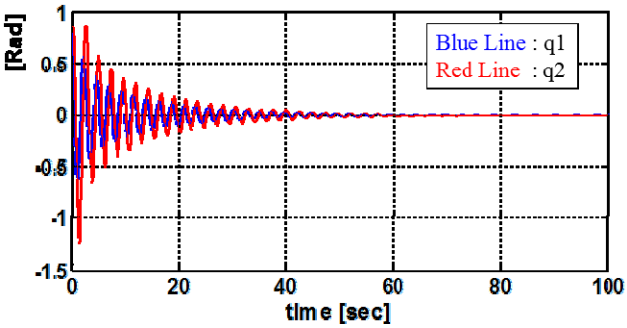

Fig. 9 Illustrative Example

References

[1] Russ Tedrake, Underactuated Robotics: Learning, Planning, and Control for Efficient and Agile Machines, Course Notes for MIT 6.832, 2009.
[2] Mark W. Spong, Control Problems in Robotics and Automation, Lecture Notes in Control and Information Science, vol. 230, pp. 135-150, Springer-Verlag, 1998.
[3] Chun-Yi Su and Yury Stepanenko, "Adaptive Variable Structure Set-Point Control of Underactuated Robots," IEEE Transaction on Automatic Control, vol. 44, no. 11, pp. 2090-2093, Nov. 1999.
[4] Mun-Soo Park and Dongkyoung Chwa, "Swing-Up and Stabilization Control of Inverted-Pendulum System via Coupled-Mode Control Method," IEEE Transaction on Industrial Electronics, vol. 56, no. 9, pp. 3541-3555, Sep. 2009.
[5] Rong Xu and Umit Ozguner, "Sliding Mode Control of a Class of Underactuated Systems," Automatica, vol. 44, pp. 233-241, 2008.
[6] Simscape™ 3 User's Guide, Mathworks.